July 29, 2010

Sediment Sampling Summary Memorandum for WQC Application – Bridge No. C-07-001 Mitchell River Bridge (MHD Project Number 603690)

URS Corporation is in the process of designing a replacement bridge, on behalf of Massachusetts Department of Transportation (MassDOT), Highway Division, to replace the structurally deficient Mitchell River Bridge in the Town of Chatham Massachusetts.

To assess the current sediment quality, URS collected two sediment samples from 0-4' below the existing channel bottom in the areas of the proposed dredging. The samples were obtained by drilling through the existing bridge deck and collected using a 3 inch diameter 2 foot long oversized split spoon sampler. At both sampling locations (BB-3 & BB-5) the split spoon was advanced from 0-2' below the channel bottom. A second sample was collected from 2-4' below channel bottom. The two samples were composited together into one 0-4' sample prior to being transferred into one 8oz glass jar, one 4oz plastic jar and two 40ml preserved vials. Once both samples were collected, they were placed in a cooler with ice ready to be couriered to the laboratory for analysis. A Chain of Custody Record form was completed and included with the samples prior to transfer to the courier for delivery to the laboratory.

Each of the two samples collected were analyzed by AMRO Analytical Laboratories in Merrimack NH, for chemical constituents per the WW-07 application form and 314 CMR 9.07(2). These analyses included: Extractable Petroleum Hydrocarbons (EPH), total metals (As, Cd, Cr, Cu, Pb, Hg, Ni, Zi), Polychlorinated Biphenyls (PCBs), Polynculear Aromatic Hydrocarbons (PAHs), Total Organic Carbon (TOC), volatile solids, and moisture content. The analyses were performed pursuant to DEP's Compendium of Analytical Methods. Pursuant to 314 CMR 9.07(9), results from the analyses was compared to Massachusetts Contingency Plan (MCP, 310 CMR 40.0360) Reportable Concentrations (RCS-1) and to MassDEP Policy for Reuse and Disposal of Contaminated Soils at Massachusetts Landfills (COMM-97-001). As shown on Table 1, Methylene Chloride was detected at the concentrations RCS-1 standard of 0.1 parts per million (ppm); however, this is a common laboratory contaminant and the absence of other Volatile Organic Compounds (VOCs) affirms the source. Low concentrations of PAHs were detected in both samples and may be attributed to roadway run-off or creosote coatings of the nearby timber piles. PCBs were not detected during analysis. Metal concentrations at both locations including Arsenic, Chromium, Copper, Lead & Zinc were reported above detection limits. Nickel was also reported above detection limits for BB-5. At location BB-3, Arsenic slightly exceeded the RCS-1 standard of 20 ppm. The source of the Arsenic is unknown, but could be related to old pressure treated lumber in the existing bridge.

Each of the composite samples was also analyzed for grain size distribution (i.e. sieve analysis) by Briggs Engineering & Testing from Rockland Massachusetts. These results are also shown on Table 1. The sieve analyses indicate the sediments largely consist of sand with varying amounts of silt or clay.

Included with this Sediment Sampling Summary Memorandum are the following attachments:

- Mitchell River Bridge Sediment Sampling Results Table 1
- Sediment Sampling Plan (Showing sample Locations)

URS Corporation
260 Franklin Street, Suite 300
Boston, MA 02110
Tel: 617.542.4244
Fax: 617.542.3301

- AMRO Laboratories Chain of Custody Record and Data Report
- Briggs Engineering Sieve Analysis Results

Sediment Sampling Results
Mitchell River Bridge
Chatham MA.

Test Parameter	Sample ID Sample Date	Sample		Standards		
		BB-3 (0-4') 4/2/2010 mg/kg	BB-5 (0-4') 4/1/2010 mg/kg	MCP RCS-1 Standard mg/kg	Sediment Reuse mg/kg Lined	Sediment Reuse mg/kg Unlined
VOC 8260	Acetone	<0.23	<0.25	6	10	4
	Teriary Amyl Methyl Ether	<0.046	<0.044	NE	NE	NE
	Benzene	<0.023	<0.022	2	10	4
	Bromobenzene	<0.023	<0.022	100	10	4
	Bromochloromethane	<0.023	<0.022	NE	NE	NE
	Bromodichloromethane	<0.023	<0.022	0.1	10	4
	Bromoform	<0.046	<0.044	0.1	10	4
	Bromomethane	<0.046	<0.044	0.5	10	4
	sec-Butylbenzene	<0.023	<0.022	NE	NE	NE
	n-Butylbenzene	<0.023	<0.022	NE	NE	NE
	tert-Butylbenzene	<0.023	<0.022	100	10	4
	Carbon disulfide	<0.046	<0.044	100	10	4
	Carbon tetrachloride	<0.023	<0.022	5	10	4
	Chlorobenzene	<0.023	<0.022	1	10	4
	Dibromochloromethane	<0.023	<0.022	0.005	10	4
	Chloroethane	<0.046	<0.044	100	10	4
	Chloroform	<0.023	<0.022	0.3	10	4
	Chloromethane	<0.046	<0.044	100	10	4
	2-Chlorotoluene	<0.023	<0.022	NE	NE	NE
	4-Chlorotoluene	<0.023	<0.022	NE	NE	NE
	1,2-Dibromo-3-chloropropane	<0.12	<0.11	10	10	4
	1,2-Dibromomethane	<0.023	<0.022	0.1	10	4
	Dibromomethane	<0.023	<0.022	500	10	4
	1,3-Dichlorobenzene	<0.023	<0.022	1	10	4
	1,2-Dichlorobenzene	<0.023	<0.022	9	10	4
	1,4-Dichlorobenzene	<0.023	<0.022	0.7	10	4
	Dichlorodifluromethane	<0.046	<0.044	1000	10	4
	1,1-Dichloroethane	<0.023	<0.022	0.4	10	4
	1,2-Dichlorethane	<0.023	<0.022	0.1	10	4
	1,1-Dichloroethene	<0.023	<0.022	3	10	4
	cis-1,2-Dichoroethene	<0.023	<0.022	NE	NE	NE
	trans-1,2-Dichloroethene	<0.023	<0.022	1	10	4
	1,2-Dichloropropane	<0.023	<0.022	0.1	10	4
	1,3-Dichlroropropane	<0.023	<0.022	0.01	10	4
	2,2-Dichloropropane	<0.023	<0.022	NE	NE	NE
	1,1-Dichloropropene	<0.023	<0.022	NE	NE	NE
	cis-1,3-Dichoropropene	<0.023	<0.022	0.01	10	4
	trans-1,3-Dichloropropene	<0.023	<0.022	0.01	10	4
	Diethyl ether	<0.23	<0.22	100	10	4
	Diisopropyl ether	<0.046	<0.044	100	10	4
	1,4-Dioxane	<1.2	<1.1	0.2	10	4
	Ethyl Tertiary Butyl Ether	<0.046	<0.044	NE	NE	NE
	Ethylbenzene	<0.023	<0.022	40	10	4
	Hexachlorobutadiene	<0.046	<0.044	6	10	4
	2-Hexanone	<0.23	<0.22	100	10	4
	Isopropylbenzene	<0.023	<0.022	1000	10	4
	4-Isopropyltoluene	<0.023	<0.022	NE	NE	NE

Sediment Sampling Results
Mitchell River Bridge
Chatham MA.

Test Parameter	Sample ID Sample Date	Sample		Standards		
		BB-3 (0-4') 4/2/2010 mg/kg	BB-5 (0-4') 4/1/2010 mg/kg	MCP RCS-1 Standard mg/kg	Sediment Reuse mg/kg Lined	Sediment Reuse mg/kg Unlined
	2-Butanone	<0.23	<0.22	4	10	4
	4-Methyl-2-pentanone	-0.230	<0.22	0.4	10	4
	Methyl tert-butyl ether	<0.023	<0.022	0.1	10	4
	Methylene chloride	**0.100**	<0.044	0.1	10	4
	Naphthalene	<0.046	<0.081	4	10	4
	n-Propylbenzene	<0.023	<0.022	NE	NE	NE
	Styrene	<0.023	<0.022	3	10	4
	1,1,1,2-Tetrachloroethane	<0.023	<0.022	0.1	10	4
	1,1,2,2-Tetrachloroethane	<0.023	<0.022	0.005	10	4
	Tetrachloroethene	<0.023	<0.022	0.005	10	4
	Tetrahydrofuran	<0.23	<0.22	500	10	4
	Toluene	<0.023	<0.022	30	10	4
	1,2,4-Trichlorobenzene	<0.023	<0.022	2	10	4
	1,2,3-Trichlorobenzene	<0.023	<0.022	NE	NE	NE
	1,1,1-Trichloroethane	<0.023	<0.022	30	NE	NE
	1,1,2-Trichloroethane	<0.023	<0.022	0.1	NE	NE
	Trichloroethene	<0.023	<0.022	0.3	NE	NE
	Trichlorofluromethane	<0.046	<0.044	1000	NE	NE
	1,2,3-Trichloropropane	<0.023	<0.022	100	NE	NE
	1,2,4-Trimethylbenzene	<0.023	<0.022	1000	10	4
	1,3,5-Trimethylbenzene	<0.023	<0.022	10	10	4
	Vinyl chloride	<0.023	<0.022	3	10	4
	o-Xylene	<0.023	<0.022	NE	NE	NE
	m,p-Xylene	<0.023	<0.022	NE	NE	NE
EPH	C9-C18 Aliphatic Hydrocarbons	<12	<12	1000	5000	2500
	C19-C36 Aliphatic Hydrocarbons	<12	<12	3000	5000	2500
	C11-C22 Aromatic Hydrocarbons	<12	<12	1000	5000	2500
	Naphthalene	**0.058**	**0.016**	4	5000	2500
	2-Metylnaphthalene	**0.019**	<0.012	0.7	5000	2500
	Acenaphthylene	**0.044**	<0.012	1	5000	2500
	Acenaphthene	**0.140**	**0.044**	4	5000	2500
	Fluorene	**0.100**	**0.017**	1000	5000	2500
	Phenanthrene	**0.770**	**0.034**	10	5000	2500
	Anthracene	**0.047**	**0.100**	1000	5000	2500
	Fluoranthene	**0.610**	**1.700**	1000	5000	2500
	Pyrene	**0.700**	**1.100**	1000	5000	2500
	Benz(a)anthracene	**0.120**	**0.440**	7	5000	2500
	Chrysene	**0.420**	**0.630**	70	5000	2500
	Benz(b)fluoranthene	**0.200**	**0.200**	2	5000	2500
	Benz(k)fluoranthene	**0.150**	**0.170**	7	5000	2500
	Benzo(a)pyrene	**0.180**	**0.190**	2	5000	2500
	Dibenz(a,h)anthracene	**0.030**	**0.020**	0.7	5000	2500
	Indeno(1,2,3-cd)pyrene	**0.091**	**0.100**	7	5000	2500
	Benzo(g,h,i)perylene	**0.150**	**0.100**	1000	5000	2500

Sediment Sampling Results
Mitchell River Bridge
Chatham MA.

Test Parameter	Sample ID Sample Date	Sample		Standards		
		BB-3 (0-4') 4/2/2010 mg/kg	BB-5 (0-4') 4/1/2010 mg/kg	MCP RCS-1 Standard mg/kg	Sediment Reuse mg/kg Lined	Sediment Reuse mg/kg Unlined
PCBs 8082	Aroclor 1016	<0.03	<0.031	2	<2	<2
	Aroclor 1221	<0.03	<0.031	2	<2	<2
	Aroclor 1232	<0.03	<0.031	2	<2	<2
	Aroclor 1242	<0.03	<0.031	2	<2	<2
	Aroclor 1248	<0.03	<0.031	2	<2	<2
	Aroclor 1254	<0.03	<0.031	2	<2	<2
	Aroclor 1260	<0.03	<0.031	2	<2	<2
	Aroclor 1262	<0.03	<0.031	2	<2	<2
	Aroclor 1268	<0.03	<0.031	2	<2	<2
TOC		2600	1200	NE	NE	NE
Percent Solid		84	83			
Percent Moisture		20.1	19.4	NE	NE	NE
ICP Metals	Arsenic	**21.6**	**11.1**	20	40	40
	Cadmium	<0.78	<0.703	2	80	30
	Chromium	**4.95**	**11.2**	30	1000	1000
	Copper	**4.42**	**8.82**	1000	NE	NE
	Lead	**4.27**	**6.52**	300	2000	1000
	Nickel	<6.24	**10**	20	NE	NE
	Zinc	**12.8**	**24**	2500	NE	NE
	Mercury	<0.0589	<0.0582	20	10	10

< = Non-detect (detection limits shown)
[Bold] = Concentrations reported above detection limit
[Bold-Yellow] = Exceeds MCP RCS-1 Standard
NE = None Established

Sediment Sampling Results
Mitchell River Bridge
Chatham MA.

Grain Size	Particle Size Analysis (Sieve Size)		Results
	Standard	Alternate	% Pass
BB-3	100mm	4"	100
	90mm	3.5"	100
	75mm	3"	100
	63mm	2.5"	100
	50mm	2"	100
	37.5mm	1.5"	100
	25mm	1"	100
	19mm	3/4"	99
	12.5mm	1/2"	98
	9.5mm	3/8"	98
	4.75mm	#4	96
	2.00mm	#10	90
	0.850mm	#20	80
	0.425mm	#40	64
	0.250mm	#60	44
	0.106mm	#140	12
	0.053mm	#270	7
BB-5	100mm	4"	100
	90mm	3.5"	100
	75mm	3"	100
	63mm	2.5"	100
	50mm	2"	100
	37.5mm	1.5"	100
	25mm	1"	100
	19mm	3/4"	99
	12.5mm	1/2"	99
	9.5mm	3/8"	99
	4.75mm	#4	99
	2.00mm	#10	97
	0.850mm	#20	94
	0.425mm	#40	86
	0.250mm	#60	68
	0.106mm	#140	35
	0.053mm	#270	23

AMRO Environmental Laboratories Corporation
111 Herrick Street
Merrimack, NH 03054

CHAIN-OF-CUSTODY RECORD

59899

Office: (603) 424-2022
Fax: (603) 429-8496
web: www.amrolabs.com

Project No.:	Project Name:	Project State:	Project Manager:	Samplers (Signature):	AMRO Project No.:
10160738	CHATHAM BRIDGE	MA.	IRWAN HALIM	[signature]	1004004

P.O.#:

Results Needed by: 14 day TAT from sampling date

QUOTE #:

Seal Intact? Yes No N/A

REQUESTED ANALYSES

Sample ID.:	Date/Time Sampled	Matrix	Total # of Cont. & Size	Comp.	Grab	Metals (As, Cd, Cr, Cu, Pb, Hg, Ni, Zn)	PCB Method 8082	EPH 1.1 w/PAH Targets	VOC Method 8260	Moisture Content	*TOC (Subcontd)	Remarks
BB-5 (0-4')	4-1-10/0930	S	4	✓		✓	✓	✓	✓	✓		* Note: Both 0-4' Composite samples collected from 0-2' & 2-4' below mudline.
BB-3 (0-4')	4-2-10/0810	S	4	✓		✓	✓	✓	✓	✓		

Preservative: Cl-HCl, MeOH, N-HN03, S-H2SO4, Na-NaOH, O- Other

Send Results To: URS CORPORATION
ATTN. Aleksandar Marinkovic
260 Franklin Street Suite 300
Boston, MA 02110

PRIORITY TURNAROUND TIME AUTHORIZATION
Before submitting samples for expedited TAT, you must *have a coded AUTHORIZATION NUMBER*
AUTHORIZATION No.: BY:

METALS 8 RCRA ☐ 13 PP ☐ 23 TAL ☐ 14 MCP ☐
Method: 6010 ☐ 200.7 ☐ Other Metals:
Dissolved Metals Field Filtered? YES ☐ NO ☐

PHONE #: FAX #: 617 542-3301
E-mail: aleksandar_marinkovic@urscorp.com

MCP Presumptive Certainty Required? YES ✓ NO ☐

MCP Methods Needed: YES ✓ NO ☐

Required Reporting Limits: S-1 ☐ GW-1 ☐ S-2 ☐ GW-2 ☐ S-3 ☐ GW-3 ☐ Other:

Relinquished By:	Date/Time	Received By
[signature]	4-5-10/0430	[signature]
[signature]	4/5/10 12:15	[signature]

AMRO report package level needed:

EDD required:

Please print clearly, legibly and completely. Samples can not be logged in and the turnaround time clock will not start until any ambiguities are resolved.

Samples arriving after 12:00 noon will be tracked and billed as received on the following day.

AMRO policy requires notification in writing to the laboratory in cases where the samples were collected from highly contaminated sites.

KNOWN SITE CONTAMINATION: NONE

White: Lab Copy Yellow: Client Copy

SHEET 1 OF 1

AMROCOC2004, Rev.3 08/18/04

8 own

AMRO Environmental Laboratories Corporation
111 Herrick Street
Merrimack, NH 03054

CHAIN-OF-CUSTODY RECORD

Office: (603) 424-2022
Fax: (603) 429-8496
web: www.amrolabs.com

Project No.:	Project Name:	Project State:	Project Manager:	Samplers (Signature):	AMRO Project No.:
101607	CHATHAM BRIDGE	MA		MG	1004004

P.O.#:	Results Needed by:
	STD

QUOTE #:	Seal Intact? Yes No N/A

REQUESTED ANALYSES: TOTAL ORGANIC CARBON

Sample ID.:	Date/Time Sampled	Matrix	Total # of Cont. & Size	Comp.	Grab	TOTAL ORGANIC CARBON	Remarks
BB-5 (0-4')	4-1-10 9:30	S	1	✓		✓	89596
* BB-3 (0-4')	4-2-10 08:10	S	1	✓		✓	89597

Preservative: Cl-HCl, MeOH, N-HN03, S-H2SO4, Na-NaOH, O- Other

Send Results To: NANCY STEWART
AMRO ENVIRONMENTAL
111 HERRICK ST
MERRIMACK - NH - 03054

PRIORITY TURNAROUND TIME AUTHORIZATION
Before submitting samples for expedited TAT, you must *have a coded AUTHORIZATION NUMBER*
AUTHORIZATION No.: BY:

METALS 8 RCRA ☐ 13 PP ☐ 23 TAL ☐ 14 MCP ☐
Method: 6010 ☐ 200.7 ☐ Other Metals:
Dissolved Metals Field Filtered? YES ☐ NO ☐

PHONE #: FAX #:
E-mail:

MCP Presumptive Certainty Required? YES ☐ NO ☐

MCP Methods Needed: YES ☐ NO ☐

Required Reporting Limits: S-1 ☐ GW-1 ☐ S-2 ☐ GW-2 ☐ S-3 ☐ GW-3 ☐

Relinquished By:	Date/Time	Received By
[signature]	4-5-10 17:00	[signature]
fedex	4-6-10 10:38	[signature]

AMRO report package level needed: L2

EDD required:

Other:

Please print clearly, legibly and completely. Samples can not be logged in and the turnaround time clock will not start until any ambiguities are resolved.

Samples arriving after 12:00 noon will be tracked and billed as received on the following day.

AMRO policy requires notification in writing to the laboratory in cases where the samples were collected from highly contaminated sites.

KNOWN SITE CONTAMINATION:

White: Lab Copy Yellow: Client Copy

SHEET OF

AMROCOC2004, Rev.3 08/18/04

*-bar recid broken Transferred at lab

March 09, 2010

Massachusetts Department of Environmental Protection
Attention: Ken Chin
1 Winter Street
Boston, MA 02108

Re: Dredge Sediment Sampling Plan for WQC Application – Bridge No. C-07-001 Bridge Street over Mitchell River, Chatham MA (MHD Project Number 603690)

Dear Mr. Chin:

URS Corporation is in the process of designing a replacement bridge, on behalf of Massachusetts Department of Transportation (MassDOT) - Highway Division, to replace the Bridge Street bridge over Mitchell River in the Town of Chatham. The existing timber bridge is being replaced because it is structurally deficient.

The existing bridge consists of timber piles and decking and concrete abutments. The overall length of the superstructure is 192 feet and 37 feet in width, with a bascule draw span length of 23 feet. The bridge will be replaced in its entirety with a five span structure, total overall length of 195 feet. The curb-to-curb roadway width of the bridge will be 24 feet, and there will be 5.75 feet of sidewalk on both sides. The new abutments, semi integral with the superstructure and supported on concrete piles, will be in the same approximate location as the existing abutments. The piers will consist of concrete caps on concrete piles. The existing timber piles in the river will be cut-off to approximately two feet below the bottom of the channel and temporary sheeting may be placed to control water and reduce the excavation footprint during construction. The finished river bottom after construction will maintain the same approximate grade as that of the existing river bottom.

The design anticipates the dredging of bottom sediments to a maximum depth of approximately 4 feet in the area of the bascule span for the installation of the new bascule foundation pile cap. The piles in the fixed span locations will be driven and no dredging is anticipated. The volume of dredged sediments in the bascule span area is anticipated to be approximately 200 cubic yards. URS is preparing an Application for 401 Water Quality Certificate (Form BRP WW-07) for the dredging aspects of the project. To verify the current sediment quality, URS proposes to collect 2 current sediment samples from depths of 0-4 feet below the existing channel bottom in the areas of the proposed dredging. The samples will be collected in March in conjunction with geotechnical borings. Attached is a plan showing the sampling locations. Samples are anticipated to be collected at 2-foot intervals with a stainless steel split spoon sampler. Samples from each of the two borings within the channel (BB#3 and BB#5) will be composited individually, such that a composite sediment sample from BB#3 and a composite sediment sample from BB#5 will be obtained. Each of these two samples will subsequently be analyzed by AMRO Analytical Laboratories for chemical constituents per the WW-07 application form. These analyses include: Extractable Petroleum Hydrocarbons (EPH), total metals (As, Cd, Cr, Cu, Pb, Hg, Ni, Zi), Polychlorinated Biphenyls (PCBs), Polynculear Aromatic Hydrocarbons (PAHs), volatile solids, and water content. The analyses will be performed pursuant to DEP's Compendium of Analytical Methods. Results from the analyses will be compared to DEP's disposal facility acceptance criteria (COMM-97). The composite samples will also be analyzed for grain size distribution (i.e. sieve analysis) by Geotesting Express.

URS Corporation
260 Franklin Street, Suite 300
Boston, MA 02110
Tel: 617.542.4244
Fax: 617.542.3301

If you have any questions about this request, or require additional information, please contact me at 857-383-3822.

Sincerely,
URS Corporation

Brian Vaillancourt
Manager – Planning & Permitting Group

CC: Erin Remillard, MassDOT

Attachments: Boring Plans

J:\MassHighway\2009 SEDRSCM 5\Assignment #1 - Chatham Bridge\400 Work Products & Reports - Active & Draft (No PDF)\460 Permiting (application, back-up materials)\WQC\WQC Sampling Plan - Chatham.doc

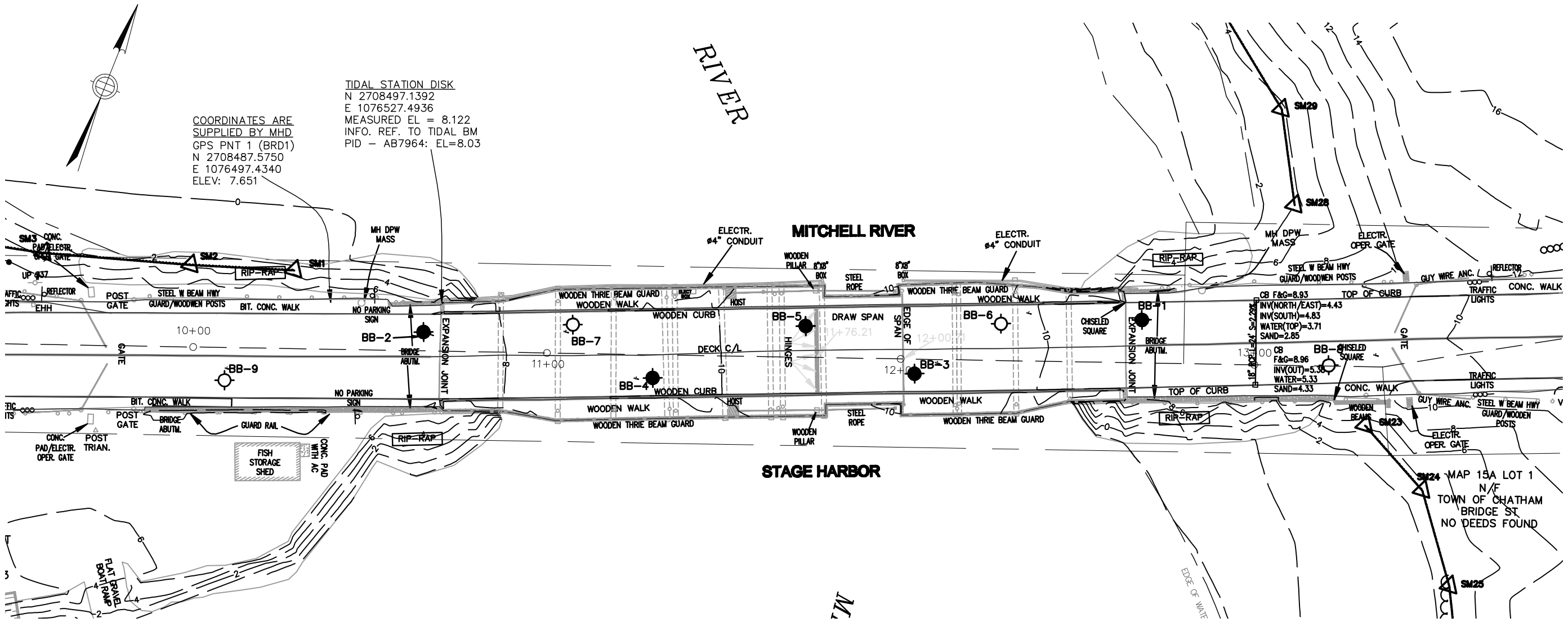

BORING PLAN

SCALE: 1" = 30'-0"

BORING LOCATIONS (FEET)						
BORING	NORTHING	EASTING	STATION	OFFSET	SURFACE	H.B.E.
BB-1	2,708,551	1,076,718	12+68.0	12.16 LT	9.3	-90.7
BB-2	2,708,488	1,076,525	10+65.0	5.33 LT	7.4	-92.6
BB-3	2,708,518	1,076,661	12+4.0	4.10 RT	10.7	-39.3
BB-4	2,708,495	1,076,590	11+30.0	6.56 RT	9.3	-40.7
BB-5	2,708,522	1,076,627	11+73.0	8.85 LT	10.5	-39.5
BB-6	2,708,526	1,076,686	12+30.0	3.34 RT	10.2	-39.80
BB-7	2,708,486	1,076,562	11+0.0	7.58 RT	8.3	-41.7
BB-8	2,708,554	1,076,772	13+21.0	0.22 LT	9.3	-40.70
BB-9	2,708,459	1,076,475	10+9.0	9.26 RT	7.2	-42.75

PROJECT FILE NO. 603690

massDOT Highway

BORING PLAN FOR PROPOSED BRIDGE
IN

CHATHAM

BRIDGE STREET
OVER MITCHELL RIVER

THE COMMONWEALTH OF MASSACHUSETTS
HIGHWAY DEPARTMENT

FEBRUARY 2010

SHEET 1 OF 2 BRIDGE NO. C-07-001(437)

PLOTTED: 03/09/10 1:22PM BY:ALEKSANDAR_MARINKOVI
DRAWING: J:\MASSHIGHWAY\2009 SEDRSCM 5\ASSIGNMENT #1 - CHATHAM BRIDGE\500 CADD - GIS - GRAPHICS\510 CADD\STRUC\MISC\CHATHAM BORING PLAN.DWG

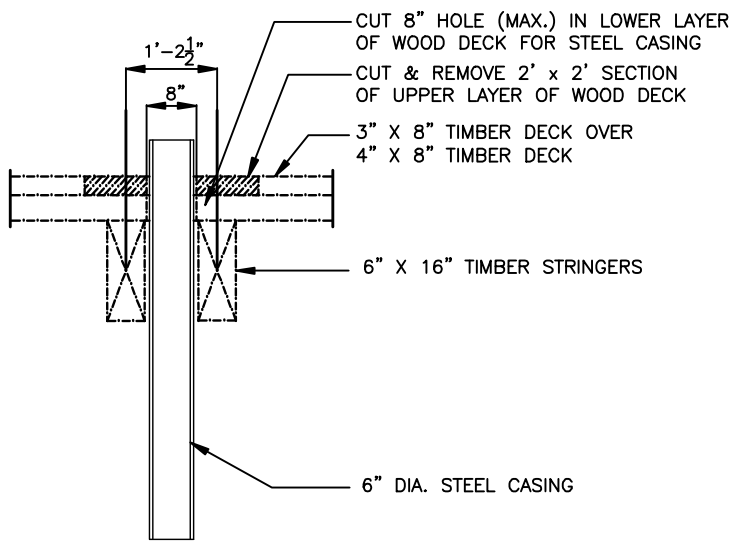

SUGGESTED SETUP FOR DRILLING THROUGH BRIDGE DECK
N.T.S.

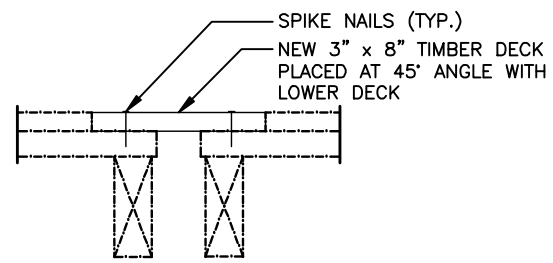

DECK REPAIR DETAIL
N.T.S.

NOTES:

1. LOCATION OF CONTROL DRIVE SAMPLE BORINGS ARE SHOWN THUS: ●
   LOCATION OF COMPLIMENTARY DRIVE SAMPLE BORINGS ARE SHOWN THUS: ○
2. COMPLIMENTARY BORINGS ARE ONLY TO BE TAKEN DEPENDING ON THE RESULTS OF CONTROL BORINGS UNLESS DIRECTED BY THE ENGINEER.
3. BORINGS SHALL BE PERFORMED IN THE SEQUENTIAL NUMBERING ORDER. BORING BB–1 SHALL BE TAKEN FIRST, BORING BB–2 TAKEN SECOND, ETC. BORING BB–9 SHALL BE TAKEN LAST.
4. SEE THE BORING LOCATIONS TABLE FOR THE SPECIFIED HIGHEST BOTTOM ELEVATION (H.B.E.) OF EACH BORING.
5. ALL BORINGS SHALL HAVE SAMPLES TAKEN EVERY 5 FT.. BORING BB–2 SHALL HAVE SAMPLES TAKEN EVERY 5 FT. FOR THE FIRST 50 FT. AND AT 10 FT. INTERVALS THEREAFTER FORTHE REMAINING OF THE BORING.
6. BORINGS BB–1 TO BB–5 SHALL EXTEND TO THE SPECIFIED HIGHEST BOTTOM ELEVATION OR TO REFUSAL BELOW THE H.B.E., WHICHEVER IS DEEPER. BORINGS BB–6 TO BB–9 SHALL EXTEND TO THE H.B.E. AND THEN BE TERMINATED.
7. SHOULD BEDROCK BE ENCOUNTERED AT OR ABOVE THE SPECIFIED HIGHEST BOTTOM ELEVATION, THE BORING SHALL BE CONTINUED AS A ROCK CORE BORING FOR A DEPTH OF 10' THEN TERMINATED.
8. BENCHMARK: TIDAL STATION DISK (TIDAL BM PID AB7964)
9. BORINGS ARE LOCATED FROM THE BASELINE OF BRIDGE STREET.
10. ADDITIONAL BORINGS MAY BE REQUESTED BY THE ENGINEER IF NECESSARY.
11. BORINGS ARE LOCATED APPROXIMATELY 5 FT OFF OF THE EXISTING CURBLINE.
12. BB–3 AND BB–5 SHALL TAKE 4 FT SEDIMENT SAMPLES AT RIVER BED. THE SAMPLE SHALL BE TAKEN WITH AN OVERSIZE SPOON.

PLOTTED: 03/09/10 1:23PM BY:ALEKSANDAR_MARINKOVI
DRAWING: J:\MASSHIGHWAY\2009 SEDRSCM 5\ASSIGNMENT #1 – CHATHAM BRIDGE\500 CADD – GIS – GRAPHICS\510 CADD\STRUC\MISC\CHATHAM BORING PLAN.DWG