| CHATHAM BRIDGE STREET | | | |
|---|---|---|---|
| STATE | FED. AID PROJ. NO. | SHEET NO. | TOTAL SHEETS |
| MASS. | NHP-002S(539) | 1 | 214 |
| PROJECT FILE NO. 603690 | | | |

TITLE AND INDEX

# MASSACHUSETTS DEPARTMENT OF TRANSPORTATION
# HIGHWAY DIVISION

PLAN AND PROFILE OF

## BRIDGE STREET
## (BRIDGE C-07-001)

IN THE TOWN OF

## CHATHAM
## BARNSTABLE COUNTY

FEDERAL AID PROJECT NO. NHP-002S(539)

THE MASSACHUSETTS HIGHWAY DEPARTMENT STANDARD SPECIFICATIONS FOR HIGHWAYS AND BRIDGES DATED 1988, AS AMENDED, THE SUPPLEMENTAL SPECIFICATIONS DATED JUNE 15, 2012, THE 2012 CONSTRUCTION STANDARD DETAILS, THE 1996 CONSTRUCTION AND TRAFFIC STANDARD DETAILS (AS RELATES TO TRAFFIC STANDARD DETAILS ONLY), THE 2009 MANUAL ON UNIFORM TRAFFIC CONTROL DEVICES FOR STREETS AND HIGHWAYS WITH MASSACHUSETTS AMENDMENTS, THE 1990 STANDARD DRAWINGS FOR SIGNS AND SUPPORTS, THE 1968 STANDARD DRAWINGS FOR TRAFFIC SIGNALS AND HIGHWAY LIGHTING AND THE LATEST EDITION OF THE AMERICAN STANDARD FOR NURSERY STOCK, WILL GOVERN.

### INDEX


| SHEET NO. | DESCRIPTION |
|---|---|
| 1 | TITLE SHEET & INDEX |
| 2 | LEGEND & ABBREVIATIONS |
| 3 | KEY PLAN & BORING LOCATIONS |
| 4–7 | TYPICAL SECTIONS |
| 8–15 | CONSTRUCTION DETAILS |
| 16–17 | CONSTRUCTION PLANS |
| 18–19 | PROFILE PLANS |
| 20–21 | GRADING AND TIE PLANS |
| 22 | TEMPORARY TRAFFIC CONTROL PLAN |
| 23 | TEMPORARY TRAFFIC DETAILS |
| 24–25 | SIGN, SIGNAL & PAVEMENT MARKING PLANS |
| 26 | SIGN SUMMARY SHEET |
| 27 | SIGNAL DETAILS SHEET |
| 28–29 | UTILITY PLANS |
| 30–31 | UTILITY DETAIL SHEETS |
| 32–33 | LANDSCAPE PLANS |
| 34–35 | LANDSCAPE DETAIL SHEETS |
| 36–208 | BRIDGE PLANS |
| 209–214 | CROSS SECTIONS |


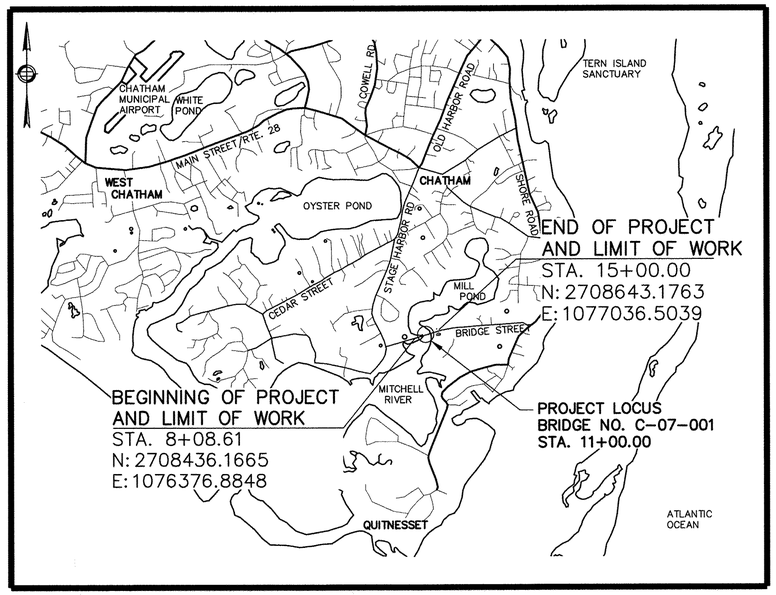


LOCUS PLAN

### DESIGN DESIGNATION

| | |
|---|---|
| DESIGN SPEED | 30 mph |
| ADT (2010) | 866 |
| ADT (2030) | 1,100 |
| K | 0.09 |
| D | 50/50 |
| T(PEAK HOUR) | 8% |
| T(AVERAGE DAY) | 8% |
| DHV | 80 |
| DDHV | 40 |
| FUNCTIONAL CLASS | URBAN COLLECTOR |

### CONVENTIONAL SYMBOLS

- COUNTY, CITY, OR TOWN BOUNDARY
- COUNTY, CITY, OR TOWN SIDE LINE
- FENCE LINE
- BASE LINE OR SURVEY LINE (N 57°18'41"E, 59.570 FT; 74)
- RIGHT OF WAY LINE
- CULVERT
- PROPERTY LINE
- ELEVATIONS (PROPOSED SURFACE; EXIST SURFACE; 98.2; 102.67; 74)
- POLE

HOR SCALE IN FEET
0 2000 5000 10000

LENGTH OF PROJECT = 691.39 FEET = 0.131 MILES
SCALE: AS NOTED

OCTOBER 2013

COMMONWEALTH OF MASSACHUSETTS
MARK EDWARD SHAMON
CIVIL
No. 32329
REGISTERED PROFESSIONAL ENGINEER
11/1/13

PREPARED BY:
URS CORPORATION
101 FEDERAL STREET
BOSTON, MA 02110

massDOT
Massachusetts Department of Transportation
Highway Division

RECOMMENDED FOR APPROVAL

Thomas A. DiPaolo, P.E. 11/1/13
for CHIEF ENGINEER — Date

DEPARTMENT OF TRANSPORTATION
FEDERAL HIGHWAY ADMINISTRATION
APPROVED

DIVISION ADMINISTRATOR — Date

APPROVED

Frank A. DePaola, P.E. 11/4/13
DIVISION ADMINISTRATOR — Date

PLOTTED: 10/23/2013 9:54 AM BY: ALEXANDER, CORRIVAUX
DRAWING: P:\X95-GRA\MASSDOT\MA\X095_SOMERSWORTH\X095_MASSDOT_RT__CHATHAM BRIDGE\CAD\GIS\GIS_CADD\GIS\DWG\TITLE AND INDEX.DWG [TITLE AND INDEX] 10/23/2013 9:31 AM BY: ALEXANDER, CORRIVAUX

CHATHAM
BRIDGE STREET

| STATE | FED. AID PROJ. NO. | SHEET NO. | TOTAL SHEETS |
|---|---|---|---|
| MASS. | NHP-002S(539) | 2 | 214 |
| PROJECT FILE NO. 603690 | | | |

# LEGEND AND ABBREVIATIONS

## GENERAL NOTES

1. SURVEY INFORMATION PROVIDED BY GORODETSKY ENGINEERING DATED APRIL 28, 2009.
2. COORDINATES ARE REFERENCED HORIZONTALLY TO THE MASSACHUSETTS STATE PLANE COORDINATE SYSTEM, MAINLAND ZONE, AND NORTH AMERICAN DATUM 1983, (NAD 1983). ALL ELEVATIONS REFER TO THE NORTH AMERICAN VERTICAL DATUM OF 1988.
3. ALL DIMENSIONS AND MEASUREMENTS ON DRAWINGS ARE IN FEET, EXCEPT WHERE NOTED. LABELED DIMENSIONS WHERE SHOWN TAKE PRECEDENCE OVER SCALED MEASUREMENTS.
4. AREAS OUTSIDE THE LIMITS OF PROPOSED WORK THAT ARE DISTURBED BY THE CONTRACTOR'S OPERATIONS SHALL BE RESTORED BY THE CONTRACTOR TO THEIR ORIGINAL CONDITION AT THE CONTRACTOR'S EXPENSE.
5. THE TERM "PROPOSED" (PROP) MEANS WORK TO BE CONSTRUCTED USING NEW MATERIALS OR, WHERE APPLICABLE, RE-USING EXISTING MATERIALS IDENTIFIED AS "REMOVE AND RESET" (R&R).
6. CONFORM TO APPLICABLE REGULATORY PROCEDURES AND NOTIFY THE OWNER WHEN DISCOVERING HAZARDOUS OR CONTAMINATED MATERIALS.
7. THE FINAL SURFACE COURSE OF PAVEMENT FOR THE ENTIRE PROJECT AREA SHALL BE PLACED IN ONE OPERATION.
8. LOCATING STATIONS AND OFFSETS REFER TO THE CONSTRUCTION BASELINE.
9. DRAINAGE ELEVATIONS ARE PROVIDED FOR DESIGN PURPOSES ONLY. THE CONTRACTOR SHALL VERIFY BY TEST PIT, THE LOCATIONS OF EXISTING UTILITIES WHICH MAY CONFLICT WITH THE PROPOSED DRAINAGE DESIGN. ANY FIELD ADJUSTMENTS REQUIRED WILL BE MADE AS APPROVED OR DIRECTED BY THE ENGINEER. ONLY AFTER THE CONTRACTOR VERIFIES ELEVATIONS FOR THE CONSTRUCTABILITY OF THE DRAINAGE SYSTEM SHALL ANY STRUCTURES BE ORDERED. ANY FIELD ADJUSTMENTS TO LINE & GRADE UP TO A DEPTH OF 5' SHALL BE INCLUDED IN THE COST OF THE PIPE. PIPE EXCAVATION GREATER THAN 5' WILL BE PAID UNDER CLASS B TRENCH EXCAVATION.

## CIVIL NOTES

1. IN AREAS OF FULL DEPTH PAVEMENT AND SIDEWALK RECONSTRUCTION WHERE PROPOSED MEETS EXISTING PAVEMENT, THE EXISTING PAVEMENT SHALL BE SAWCUT TO OBTAIN A CLEAN VERTICAL FACE.
2. THE BOTTOM OF NEW CEMENT CONCRETE OR BITUMINOUS CONCRETE SHALL MEET OR EXCEED THE DEPTH OF THE ADJACENT EXISTING CEMENT OR BITUMINOUS CONCRETE.
3. ALL EXISTING PAVEMENT TO BE REMOVED WITHIN THE LIMITS OF CONSTRUCTION SHALL BE TRANSPORTED TO A LEGAL DISPOSAL LOCATION. NO STOCK PILING WILL BE ALLOWED WITHIN THE PROJECT LIMITS.
4. THE LAYOUT OF ALL PEDESTRIAN RAMPS SHALL CONFORM TO ADA/AAB STANDARDS AND CURRENT MassDOT STANDARDS.
5. ALL EXISTING GRANITE CURB, THAT IN THE ENGINEER'S OPINION ARE ACCEPTABLE, SHALL BE RE-USED FOR THE PROPOSED WORK, EXCEPT CURVED CURB STONES WHICH ARE A DIFFERENT RADIUS THAN THE PROPOSED CURB STONES. ALL REUSED GRANITE CURB SHALL BE CLEANED PRIOR TO RESETTING.
6. JOINTS BETWEEN NEW BITUMINOUS CONCRETE ROADWAY PAVEMENT AND SAWCUT EXISTING PAVEMENT SHALL BE SEALED WITH BITUMEN AND BACKSANDED.

## ABBREVIATIONS

### GENERAL

| | |
|---|---|
| AADT | ANNUAL AVERAGE DAILY TRAFFIC |
| ABUT | ABUTMENT |
| ABAN | ABANDON, ABANDONED |
| AD | ALGEBRAIC DIFFERENCE IN GRADE |
| ADJ | ADJUST |
| ADT | AVERAGE DAILY TRAFFIC |
| AP | ANGLE POINT |
| APPROX | APPROXIMATE |
| BC | BOTTOM OF CURB |
| BD | BOUND |
| ℞ | BASELINE |
| BLDG | BUILDING |
| BEG | BEGIN |
| BM | BENCH MARK |
| BO | BY OTHERS |
| BOS | BOTTOM OF SLOPE |
| BR | BRIDGE |
| BRG | BEARING |
| BWF | BARBED WIRE FENCE |
| CEM | CEMENT |
| CIP CONC | CAST IN PLACE CONCRETE |
| CL | CLASS |
| ℄ | CENTERLINE |
| CLF | CHAIN LINK FENCE |
| CLR | CLEAR, CLEARANCE |
| CO | COUNTY |
| CB | COUNTY BOUND |
| CONC | CONCRETE |
| CONST | CONSTRUCT, CONSTRUCTION |
| C TO C | CENTER TO CENTER |
| CTR | CENTER |
| D DIA, or Ø | DIAMETER |
| D | % DIRECTIONAL DESIGN HOURLY VOLUME |
| DA | DRAINAGE AREA |
| DDHV | DIRECTIONAL DESIGN HOURLY VOLUME |
| DHV | DESIGN HOURLY VOLUME |
| E | EAST |
| EA | EACH |
| EC | END CURB |
| ELEV OR EL | ELEVATION |
| EMB. | EMBANKMENT |
| EOP | EDGE OF PAVEMENT |
| EOR | EDGE OF ROAD |
| EOW | EDGE OF WATER |
| EPB | ELECTRICAL PULL BOX |
| EQ | EQUAL, EQUATION |
| EXC | EXCAVATION |
| EXIST | EXISTING |
| EJ | EXPANSION JOINT |
| EXP | EXPANSION EXTERIOR, |
| EXT | EXTERNAL |
| EW | EACH WAY |
| FDN | FOUNDATION |
| FED | FEDERAL |
| FAS | FEDERAL-AID SECONDARY |
| FIN | FINISH |
| GD | GROUND |
| GG | GAS GATE |
| GPS | GLOBAL POSITIONING SYSTEM |
| GRD | GUARD |
| GRAN | GRANITE |
| GRAV | GRAVEL |
| GWA | GUY WIRE ANCHOR |
| HMA | HOT MIX ASPHALT |
| HP | HIGH POINT |
| HWY | HIGHWAY |
| HO | HOUSE |
| HOR | HORIZONTAL |
| ID | INSIDE DIAMETER, IDENTIFICATION |
| INV | INVERT |
| IP | IRON PIPE |
| IT | INTERSECTION OF SLOPES |
| JT | JOINT |
| K | RATIO OF DESIGN HOURLY VOLUME TO AVERAGE DAILY TRAFFIC, ALSO RATE OF VERTICAL CURVATURE LENGTH OF CURVE, |
| LOC | LOCATION, LOCAL |
| LP | LIGHT POLE, LOW POINT |
| LT | LEFT |
| M/E | MECHANICAL AND ELECTRICAL |
| MAX | MAXIMUM |
| MB | MAIL BOX |
| M.H.B. | MASSACHUSETTS HIGHWAY BOUND |
| MHD | MASSACHUSETTS HIGHWAY DEPT. |
| MHW | MEAN HIGH WATER |
| MLW | MEAN LOW WATER |
| MIN | MINIMUM |
| MISC | MISCELLANEOUS |
| MOD | MODIFIED |
| N | NORTH |
| N/A | NOT APPLICABLE |
| NAD | NORTH AMERICAN DATUM |
| N/F | NOW OR FORMERLY |
| NGVD | NATIONAL GEODETIC VERTICAL DATUM |
| NIC | NOT IN CONTRACT |
| NL | NAIL |
| NO OR # | NUMBER |
| NPV | NO PIPES VISIBLE |
| NR | NO RECORD |
| NTS | NOT TO SCALE |
| OC | ON CENTER |
| OD | OUTSIDE DIAMETER |
| OW | OVERHEAD WIRES |
| OPNG | OPENING |
| PC | POINT OF CURVATURE |
| PCC | POINT OF COMPOUND CURVATURE |
| PGL | PROFILE GRADE LINE |
| PI | POINT OF INTERSECTION |
| PL | PLATE, PLANTER |
| ℞ | PROPERTY LINE |
| POC | POINT ON CURVE |
| POT | POINT ON TANGENT |
| PRC | POINT OF REVERSE CURVATURE |
| PROJ | PROJECT |
| PROP | PROPOSED |
| PT | POINT, POINT OF TANGENCY |
| PVC | POINT OF VERTICAL CURVATURE |
| PVI | POINT OF VERTICAL INTERSECTION |
| PVMT | PAVEMENT |
| PVT | POINT OF VERTICAL TANGENCY |
| PWW | PAVED WATERWAY |
| QTY | QUANTITY |
| R | RADIUS OF CURVATURE, RIM |
| RAIL | RAILING |
| RC | REINFORCED CONCRETE |
| RCP | REINFORCED CONCRETE PIPE |
| RD | ROAD |
| RDWY | ROADWAY |
| REINF | REINFORCE, REINFORCING |
| REM | REMOVE |
| REQD | REQUIRED |
| RET | RETAIN, RETAINING |
| REV | REVISION, REVISED |
| ROW | RIGHT-OF-WAY |
| R&R | REMOVE AND RESET |
| R&S | REMOVE AND STACK |
| R&D | REMOVE & DISPOSE |
| RT | RIGHT |
| S | SOUTH, SLOPE, SIGN |
| SB | STONE BOUND |
| SE | SUPERELEVATION |
| SHT | SHEET |
| SHLD | SHOULDER |
| SPEC(S) | SPECIFICATION(S) |
| SQ | SQUARE |
| SSD | STOPPING SIGHT DISTANCE |
| ST. | STREET |
| STA | STATION |
| STD | STANDARD |
| STL | STEEL |
| STY | STORY |
| SURF | SURFACE, SURFACING |
| SW | SIDEWALK |
| T | % TRUCKS, TON, TANGENT LENGTH |
| TAN | TANGENT |
| TBM | TEMPORARY BENCH MARK |
| T&B | TOP AND BOTTOM |
| TOS | TOP OF SLOPE |
| TEMP | TEMPORARY |
| THK | THICK, THICKNESS |
| THRU | THROUGH |
| TOC | TOP OF CONCRETE |
| TRANS | TRANSITION |
| TYP | TYPICAL |
| USGS | U.S. GEOLOGICAL SURVEY |
| UTIL | UTILITIES |
| VC | VERTICAL CURVE |
| VERT | VERTICAL |
| W | WEST, WALL |
| W/ | WITH |
| W Bm | WITH W-BEAM |
| WCR | WHEELCHAIR RAMP |
| W/F | WOOD FRAME |
| W/O | WITHOUT |
| WP | WOOD POST, WORKING POINT |
| WT | WEIGHT |
| WWF | WELDED WIRE FABRIC |
| XCB | EXISTING CATCH BASIN |
| X-SECT. | CROSS-SECTION |
| YR | YEAR |

### UTILITIES

| | |
|---|---|
| CB | CATCH BASIN |
| CBCI | CATCH BASIN WITH CURB INLET |
| CI | CAST IRON, CURB INLET |
| CIP | CAST IRON PIPE |
| CIT | CHANGE IN TYPE |
| CMP | CORRUGATED METAL PIPE |
| CSP | CORRUGATED STEEL PIPE |
| DI | DROP INLET |
| DIP | DUCTILE IRON PIPE |
| DSCB | DEEP SUMP CATCH BASIN |
| EB | ELECTRIC BOX |
| ELEC | ELECTRICAL |
| EMH | ELECTRIC MANHOLE |
| EPB | ELECTRICAL PULL BOX |
| FE | FLARE END |
| F&C | FRAME & COVER |
| F&G | FRAME AND GRATE |
| G | GAS |
| GC | GROUND CONDUIT |
| GG | GAS GATE |
| GI | GUTTER INLET |
| GIP | GALVANIZED IRON PIPE |
| GV | GAS VALVE |
| HYD | HYDRANT |
| HH | HANDHOLE |
| INV | INVERT |
| LP | LIGHT POLE |
| MH | MANHOLE |
| PE | POLYETHYLENE |
| PVC | POLYVINYL CHLORIDE |
| R | RIM |
| RCP | REINFORCED CONCRETE PIPE |
| RELOC | RELOCATE |
| SAN | SANITARY |
| SD | STORM DRAIN |
| SDMH | STORM DRAINAGE MANHOLE |
| SS | SANITARY SEWER |
| SMH | SEWER MANHOLE |
| TEL | TELEPHONE |
| TMH | TELEPHONE MANHOLE |
| TS COND | TRAFFIC SIGNAL CONDUIT |
| TV | TELEVISION (CABLE) |
| TVMH | TELEVISION MANHOLE |
| UP | UTILITY POLE |
| UFB | UTILITY FEEDER TO BUILDING |
| WG | WATER GATE |
| WMH | WATER MANHOLE |
| WV | WATER VALVE |

## UTILITY NOTES

1. THESE PLANS SHALL NOT BE USED AS A BASIS FOR LOCATING UTILITIES. THE CONTRACTOR SHALL NOTIFY DIG SAFE AT 1-888-344-7233 PRIOR TO BEGINNING ANY EXCAVATION.
2. THE LOCATIONS OF EXISTING UNDERGROUND UTILITIES ARE SHOWN IN AN APPROXIMATE WAY ONLY AND HAVE NOT BEEN INDEPENDENTLY VERIFIED BY THE OWNER OR ITS REPRESENTATIVE. THE CONTRACTOR SHALL DETERMINE THE EXACT LOCATION OF ALL EXISTING UTILITIES BEFORE COMMENCING WORK, AND AGREES TO BE FULLY RESPONSIBLE FOR ANY AND ALL DAMAGES WHICH MIGHT BE OCCASIONED BY THE CONTRACTOR'S FAILURE TO EXACTLY LOCATE AND PRESERVE ANY AND ALL UNDERGROUND UTILITIES.
3. THE CONTRACTOR SHALL FIELD VERIFY EXISTING UTILITY LOCATIONS SHOWN ON DRAWINGS AND IMMEDIATELY REPORT TO THE ENGINEER ANY DISCREPANCIES ENCOUNTERED PRIOR TO PROCEEDING WITH THE AFFECTED PART OF WORK. PROVIDE THE LOCATION, ELEVATION AND SIZE OF THE CONFLICTING UTILITY.
4. THE CONTRACTOR SHALL MAKE ALL ARRANGEMENTS FOR THE ALTERATION AND ADJUSTMENT OF GAS, ELECTRIC, TELEPHONE, CABLE TV, FIRE ALARM AND ANY OTHER PRIVATE UTILITIES BY THE UTILITY COMPANIES. UNLESS SPECIFIED ELSEWHERE IN THE CONTRACT DOCUMENTS, ALL UTILITY CASTINGS AND FIRE ALARM BOXES SHALL BE ADJUSTED TO FINISH GRADE BY THEIR RESPECTIVE OWNERS.
5. THE CONTRACTOR SHALL PAY FOR ALL FEES AND PERMITS.
6. THE CONTRACTOR SHALL PROVIDE ADEQUATE BRACING AND SHORING OF ALL EXCAVATIONS IN ACCORDANCE WITH THE REQUIREMENTS OF ALL GOVERNING CODES AND REGULATIONS.
7. CONTRACTOR SHALL MAINTAIN ALL NEW AND EXISTING UTILITIES IN GOOD WORKING ORDER AND SHALL PROTECT THEM FROM DAMAGE AT ALL TIMES UNTIL THE WORK IS COMPLETE AND ACCEPTED.
8. THE CONTRACTOR SHALL BE RESPONSIBLE FOR THE REPLACEMENT AND RESETTING OF ALL VALVE BOXES WHICH ARE DAMAGED OR DISTURBED AS A RESULT OF ITS OPERATIONS.
9. ALL EXISTING HYDRANTS, VALVE BOXES AND MAIN LINE VALVE BOXES TO REMAIN SHALL BE ADJUSTED TO THE NEW GRADE.
10. ALL EXISTING SEWER, DRAINAGE, ELECTRIC MANHOLE COVERS, GAS GATES, WATER GATES, AND OTHER UTILITY COVERS TO REMAIN, SHALL BE ADJUSTED TO THE NEW FINISHED GRADE.
11. THE LENGTH OF PIPE INDICATED IS FROM INSIDE FACE OF STRUCTURE TO INSIDE FACE OF STRUCTURE UNLESS OTHERWISE INDICATED.
12. ALL EXISTING DRAINAGE LINES TO BE REPLACED SHALL BE ABANDONED IN PLACE. IF THEY CONFLICT WITH THE PROPOSED DRAINAGE LINES THEY SHALL BE REMOVED AS DIRECTED BY THE ENGINEER.
13. WHERE DRAINAGE PIPES OR STRUCTURES ARE ABANDONED IN PLACE THE CONTRACTOR SHALL MAKE SURE THAT ALL CONNECTING PIPES, INLETS AND OUTLETS ARE PLUGGED. ALL LIVE CONNECTIONS SHALL BE CONNECTED TO THE NEW SYSTEM.
14. ALL 12" LATERAL DRAIN PIPES SHALL BE INSTALLED WITH A MIN. PITCH OF 1% UNLESS OTHERWISE NOTED ON THE PLANS.
15. CONTRACTOR IS ADVISED THAT THE TOWN OF CHATHAM HAS AN 8-INCH WATER LINE CROSSING THE MITCHELL RIVER TO THE NORTH SIDE OF THE BRIDGE. CONTRACTOR SHALL EMPLOY SUCH METHODS AS NECESSARY TO AVOID CONSTRUCTION SUCH THAT IT WOULD DAMAGE ANY PORTION OF THE LINE AND SHALL REPAIR ANY SUCH DAMAGE AT ITS OWN EXPENSE

## GENERAL SYMBOLS

### EXISTING

| | |
|---|---|
| —S— | SEWER |
| —D— | DRAIN |
| —T— | TELEPHONE |
| —G— | GAS |
| —W— | WATER |
| —OW— | OVERHEAD WIRE |
| | EXIST CURB |
| LP | STREET LIGHT |
| | UTILITY POLE |
| | FIRE HYDRANT |
| | CATCH BASIN |
| WG | WATER GATE |
| GG | GAS GATE |
| SMH | SEWER MANHOLE |
| DMH | DRAIN MANHOLE |
| or EMH | ELECTRIC MANHOLE |
| TMH | TELEPHONE MANHOLE |
| WMH | WATER MAHOLE |
| 12.52 | EXISTING SPOT ELEVATION |
| | TRAFFIC CONTROL SIGNAL |
| | TREE |
| | SHRUB |
| | HEDGE LINE |
| | LIMIT OF VEGETATION |

### PROPOSED

| | |
|---|---|
| —OW— | OVERHEAD WIRE |
| —S— | SEWER |
| | DRAIN |
| —T— | TELEPHONE |
| —G— | GAS |
| —W— | WATER |
| | PROP CURB |
| LP | STREET LIGHT |
| | UTILITY POLE |
| | FIRE HYDRANT |
| | CATCH BASIN |
| WG | WATER GATE |
| GG | GAS GATE |
| SMH | SEWER MANHOLE |
| SDMH | STORM DRAIN MANHOLE |
| or EMH | ELECTRIC MANHOLE |
| TMH | TELEPHONE MANHOLE |
| WMH | WATER MAHOLE |
| 12.52 | SPOT ELEVATION |
| | TRAFFIC SIGNAL POST |
| TOS | TOP OF SLOPE |
| BOS | BOTTOM OF SLOPE |
| | HAYBALES & SILT FENCE |
| | TURBIDITY BARRIER |
| | SALT MARSH LIMIT |
| | TOP OF BANK |
| | EXIST TOWN LAYOUT LINE |
| | PROP EASEMENT LINE |

PLOTTED: 10/23/2013 9:26 AM BY: ALEXANDER_CURRIMJEE
DRAWING: P:\JOBS-GED\MASSHIGHWAY\2009 SEDRSCM 5\ASSIGN #1 - CHATHAM BRIDGE\500 CADD - GIS - GRAPHICS\510 CADD\603690\HD\DWG\TITLE_AND_INDEX.DWG [LEGEND AND ABBR] 10/23/2013 9:23 AM BY: ALEXANDER_CURRIMJEE

CHATHAM
BRIDGE STREET

| STATE | FED. AID PROJ. NO. | SHEET NO. | TOTAL SHEETS |
|---|---|---|---|
| MASS. | NHP-002S(539) | 3 | 214 |
| PROJECT FILE NO. 603690 | | | |

# KEY PLAN & BORING LOCATIONS

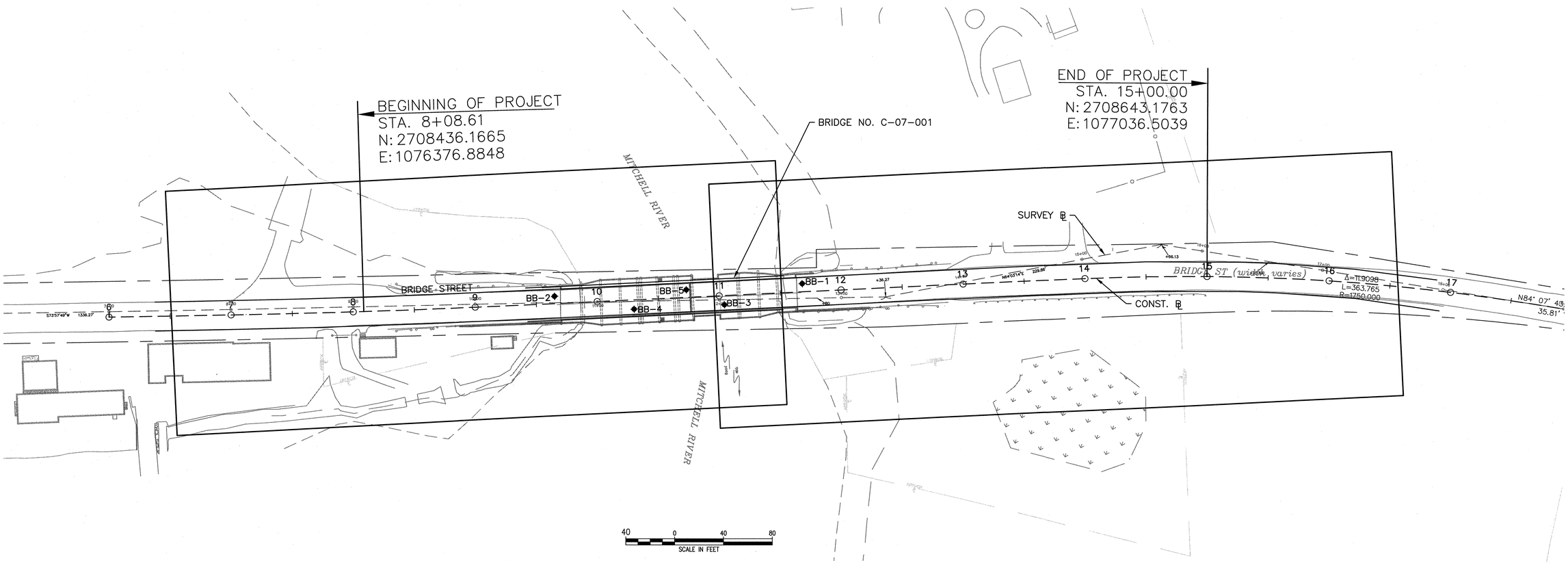


| SHEET NUMBER | SHEET TITLE |
|---|---|
| 16 | CONSTRUCTION PLAN SHEET 1 OF 2 |
| 20 | GRADING AND TIE PLAN SHEET 1 OF 2 |
| 24 | SIGN, SIGNAL & PVMT MARKING PLANS SHEET 1 OF 2 |
| 28 | UTILITY PLAN SHEET 1 OF 2 |
| 32 | LANDSCAPE PLAN SHEET 1 OF 2 |

| SHEET NUMBER | SHEET TITLE |
|---|---|
| 17 | CONSTRUCTION PLAN SHEET 2 OF 2 |
| 21 | GRADING AND TIE PLAN SHEET 2 OF 2 |
| 25 | SIGN, SIGNAL & PVMT MARKING PLANS SHEET 2 OF 2 |
| 29 | UTILITY PLAN SHEET 2 OF 2 |
| 33 | LANDSCAPE PLAN SHEET 2 OF 2 |

NOTES:

1. BORING LOCATIONS ARE BASED ON THE SURVEY ℄

LEGEND:

◆ BB-5 – PRIMARY BORINGS DRILLED IN APRIL 2010

PLOTTED: 10/23/2013 9:26 AM BY: ALEXANDER_OURRIMJEE
DRAWING: P:\V995-PRV\MARSHGHWY\X0008 SERIES\H_&VASSISN #1 - CHATHAM BRIDGE\X00 CADD - GIS - GRAPHICS\610 CADD\603690\H01DW\TITLE AND INDEX.DWG [KEY PLAN] 10/23/2013 9:23 AM BY: ALEXANDER_OURRIMJEE

CHATHAM
BRIDGE STREET

| STATE | FED. AID PROJ. NO. | SHEET NO. | TOTAL SHEETS |
|---|---|---|---|
| MASS. | NHP-002S(539) | 4 | 214 |
| PROJECT FILE NO. 603690 | | | |

TYPICAL SECTIONS
SHEET 1 OF 4

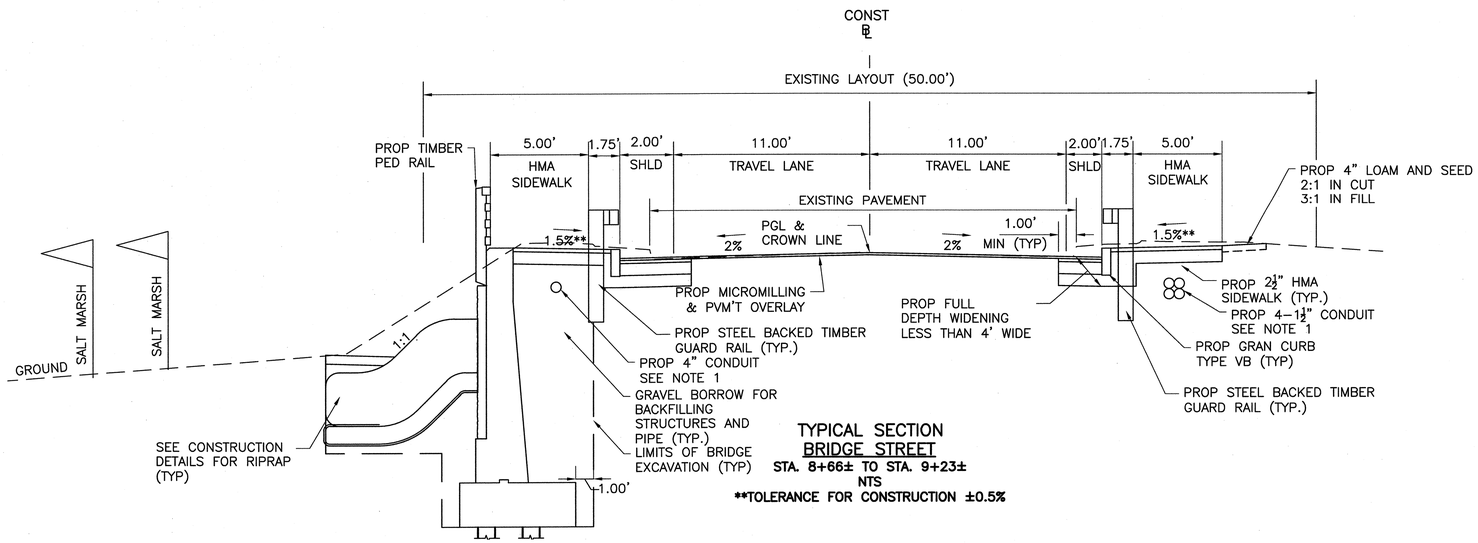


TYPICAL SECTION
BRIDGE STREET
STA. 8+66± TO STA. 9+23±
NTS
**TOLERANCE FOR CONSTRUCTION ±0.5%

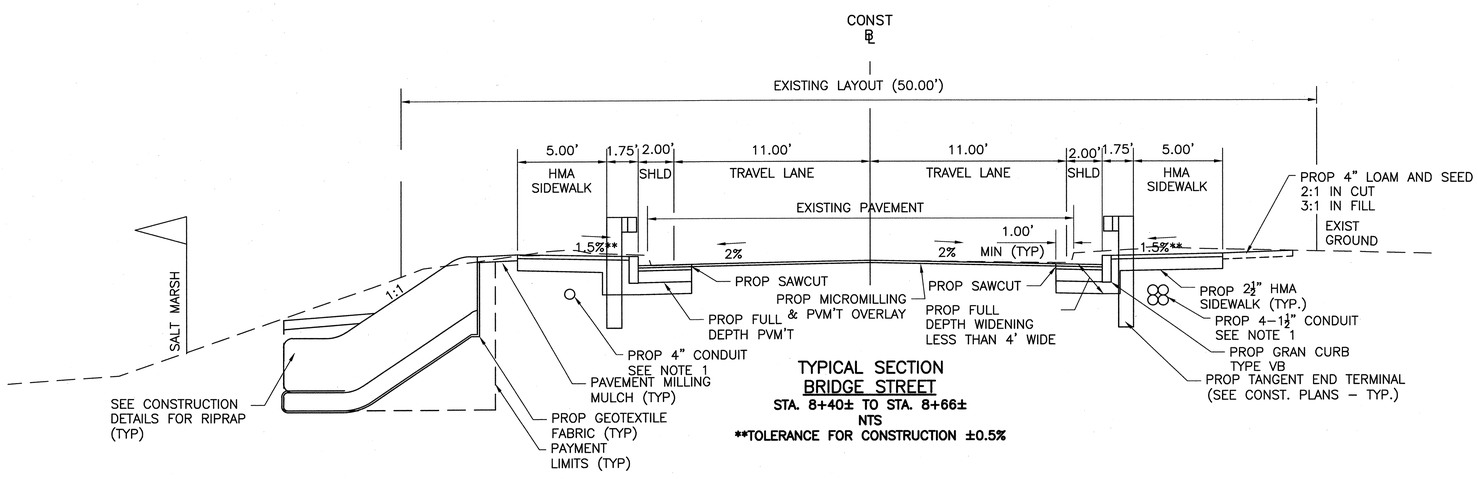


TYPICAL SECTION
BRIDGE STREET
STA. 8+40± TO STA. 8+66±
NTS
**TOLERANCE FOR CONSTRUCTION ±0.5%

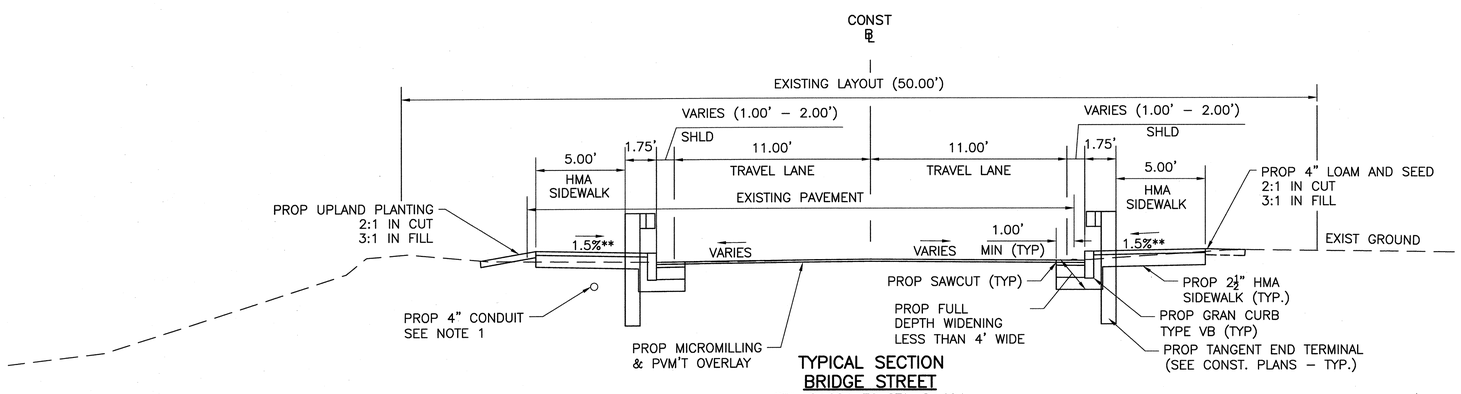


TYPICAL SECTION
BRIDGE STREET
STA. 8+08± TO STA. 8+40±
NTS
**TOLERANCE FOR CONSTRUCTION ±0.5%

## PAVEMENT NOTES

PROPOSED FULL DEPTH PAVEMENT

| | |
|---|---|
| SURFACE COURSE: | 1½" SUPERPAVE SURFACE COURSE – 12.5 (SSC-12.5) OVER<br>2" SUPERPAVE INTERMEDIATE COURSE – 12.5 (SIC-12.5) |
| BASE COURSE: | 4" SUPERPAVE BASE COURSE – 37.5 (SBC-37.5) |
| SUBBASE: | 4" DENSE GRADED CRUSHED STONE FOR SUBBASE OVER<br>8" GRAVEL BORROW, TYPE b. OVER<br>12" DEPTH OF SPECIAL BORROW(SUBGRADE REPLACEMENT) WHERE REQUIRED<br><br>ASPHALT EMULSION FOR TACK COAT APPLIED AT 0.05 GAL/SY. |

PROPOSED FULL DEPTH PAVEMENT OVER THE APPROACH SLAB

| | |
|---|---|
| SURFACE COURSE: | 1½" SUPERPAVE SURFACE COURSE – 12.5 (SSC-12.5) OVER<br>2" SUPERPAVE INTERMEDIATE COURSE – 12.5 (SIC-12.5) |
| BASE COURSE: | 4" SUPERPAVE BASE COURSE – 37.5 (SBC-37.5) |
| SUBBASE: | 5¾" DENSE GRADED CRUSHED STONE |

PROPOSED FULL DEPTH WIDENING (LESS THAN 4' WIDE)

| | |
|---|---|
| SURFACE COURSE: | 1½" SUPERPAVE SURFACE COURSE – 12.5 (SSC-12.5) OVER<br>2" SUPERPAVE INTERMEDIATE COURSE – 12.5 (SIC-12.5) |
| BASE COURSE: | 8" HIGH EARLY STRENGTH CEMENT CONCRETE |
| SUBBASE: | 8" GRAVEL BORROW, TYPE B. OVER<br><br>ASPHALT EMULSION FOR TACK COAT APPLIED AT 0.05 GAL/SY. |

PROPOSED MICROMILLING & PAVEMENT OVERLAY

| | |
|---|---|
| SURFACE COURSE: | 1½" MIN. SUPERPAVE COURSE – 12.5 (SSC-12.5) |
| TACK COAT: | 0.07 GAL/SY ASPHALT EMULSION (RS-1) OVER EXISTING MICROMILLED SURFACE |
| PAVEMENT MILLINGS: | MICROMILLING 1½" DEPTH TO MEET PROPOSED GRADING |

PROPOSED HMA SIDEWALK

| | |
|---|---|
| SURFACE: | 2½" HOT MIX ASPHALT (WALK SURFACE)<br>(USE 3½" AT DRIVEWAY APRON) |
| FOUNDATION: | 8" GRAVEL BORROW, TYPE b. |

PROPOSED WHEELCHAIR RAMP

| | |
|---|---|
| SURFACE: | 4" CEMENT CONCRETE (WHEELCHAIR RAMP) |
| FOUNDATION: | 8" GRAVEL BORROW, TYPE b. |

NOTES
1. ADDITIONAL INFORMATION IS SHOWN ON THE UTILITY PLANS AND IN THE ELECTRICAL COMPONENT OF THE BRIDGE PLANS.

PLOTTED: 10/23/2013 9:26 AM BY: ALEXANDER.CURRIMJEE
DRAWING: P:\CBS-GEN\MASSHIGHWAY\2009 SERIES\MASSION #1 - CHATHAM BRIDGE\500 CADD - GIS - GRAPHICS\510 CADD\603690\HDD\DWG\TYPICAL SECTIONS.DWG [TYPICAL SECTIONS - 1] 10/24/2013 10:45 AM BY: HAUPER-HAMANDI

CHATHAM
BRIDGE STREET

| STATE | FED. AID PROJ. NO. | SHEET NO. | TOTAL SHEETS |
|---|---|---|---|
| MASS. | NHP-002S(539) | 5 | 214 |
| PROJECT FILE NO. 603690 | | | |

# TYPICAL SECTIONS
## SHEET 2 OF 4

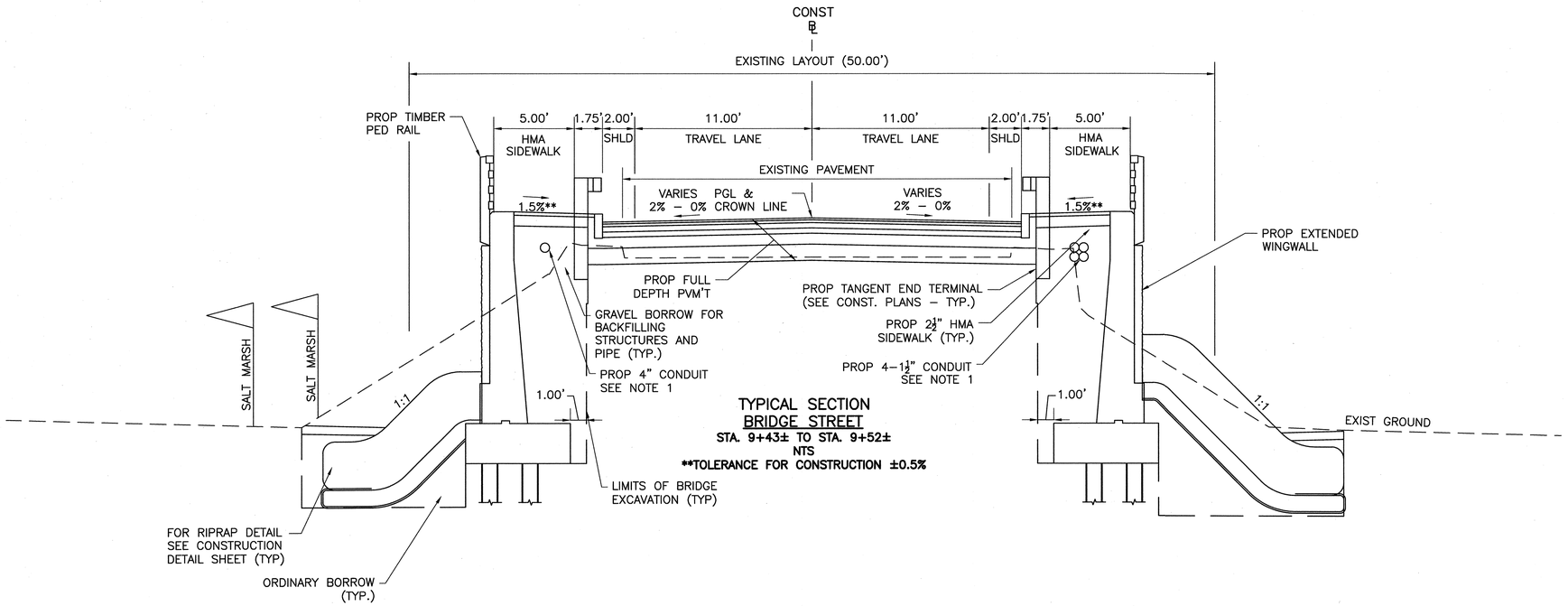


**TYPICAL SECTION**
**BRIDGE STREET**
**STA. 9+43± TO STA. 9+52±**
**NTS**
****TOLERANCE FOR CONSTRUCTION ±0.5%**

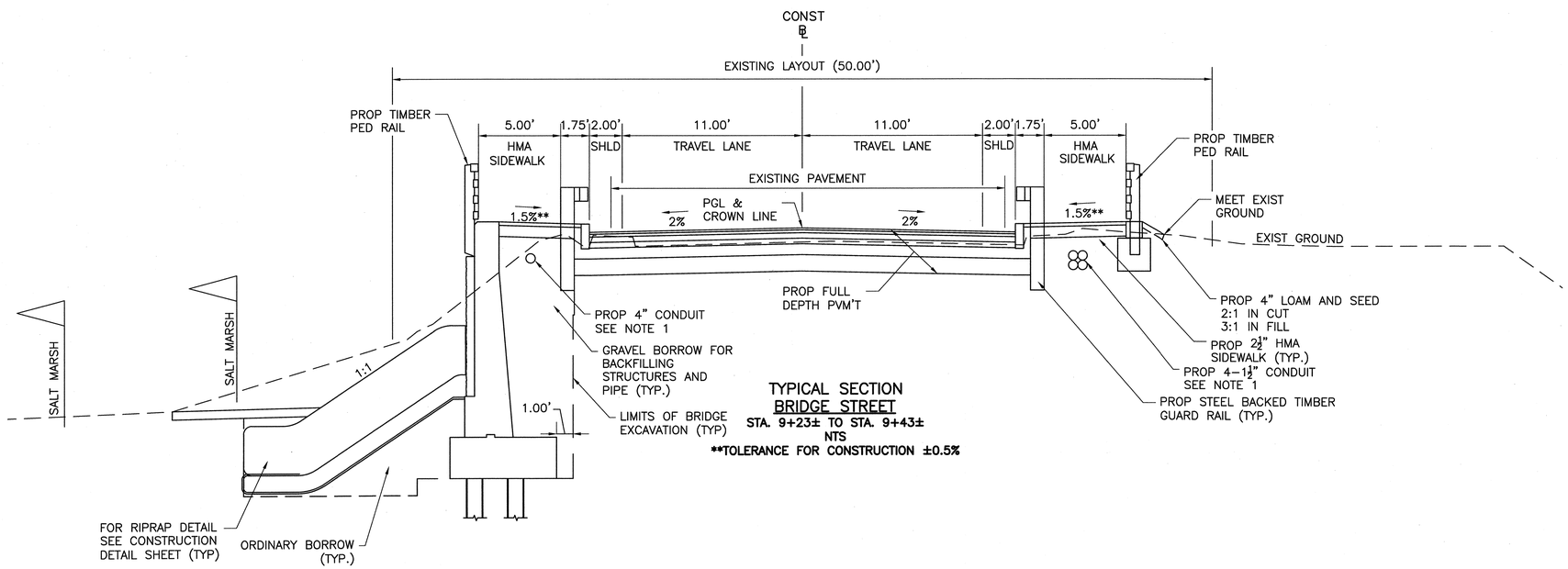


**TYPICAL SECTION**
**BRIDGE STREET**
**STA. 9+23± TO STA. 9+43±**
**NTS**
****TOLERANCE FOR CONSTRUCTION ±0.5%**

NOTES
1. ADDITIONAL INFORMATION IS SHOWN ON THE UTILITY PLANS AND IN THE ELECTRICAL COMPONENT OF THE BRIDGE PLANS.

PLOTTED: 10/23/2013 9:28 AM BY: ALEXANDER.CURRIMJEE
DRAWING: P:\KPSE-FED\MASSHIGHWAY\2009 SERIES\M 4\VERSION #1 - CHATHAM BRIDGE\500 CADD - DS - GRAPHICS\510 CADD\A6369\VD\DWG\TYPICAL SECTIONS.DWG [TYPICAL SECTIONS - 2] 10/14/2013 10:45 AM BY: HARDER.HANANDI

CHATHAM
BRIDGE STREET

| STATE | FED. AID PROJ. NO. | SHEET NO. | TOTAL SHEETS |
|---|---|---|---|
| MASS. | NHP-002S(539) | 6 | 214 |
| PROJECT FILE NO. 603690 | | | |

# TYPICAL SECTIONS
SHEET 3 OF 4

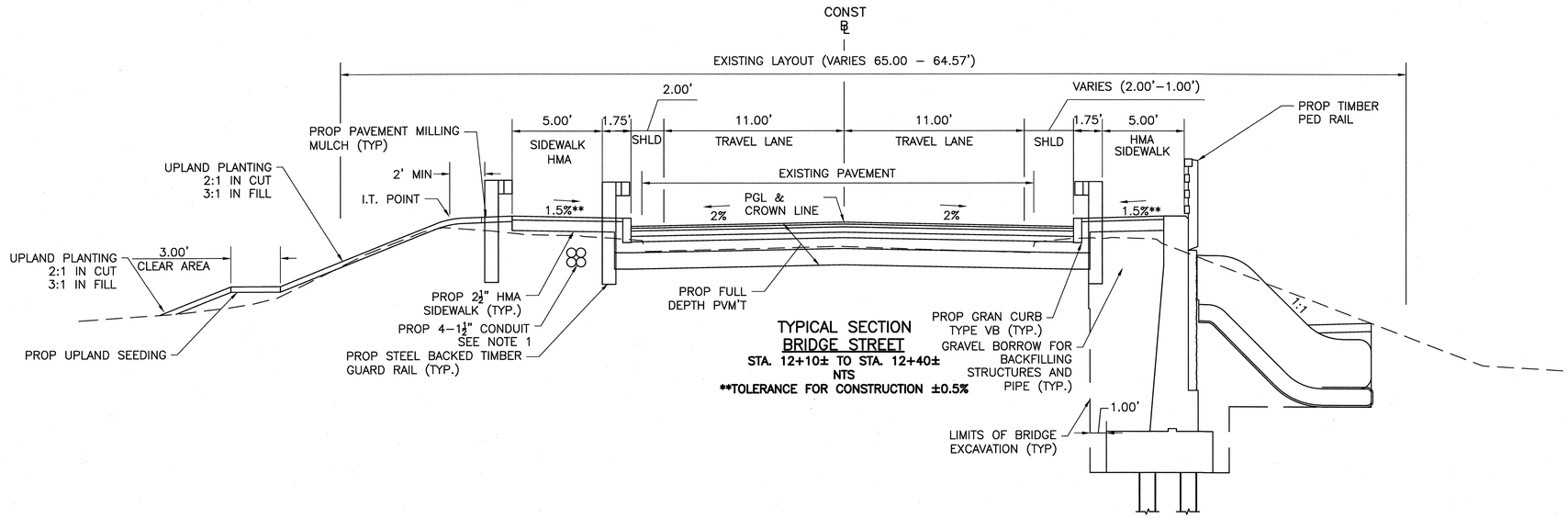


TYPICAL SECTION
BRIDGE STREET
STA. 12+10± TO STA. 12+40±
NTS
**TOLERANCE FOR CONSTRUCTION ±0.5%

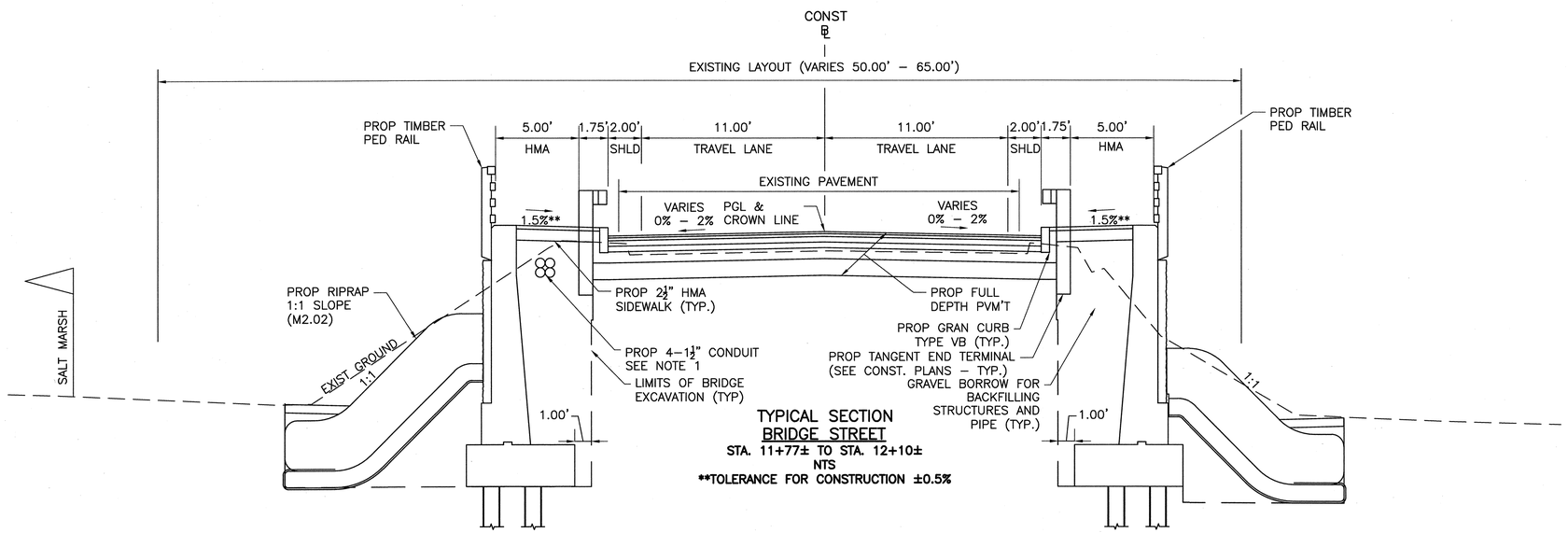


TYPICAL SECTION
BRIDGE STREET
STA. 11+77± TO STA. 12+10±
NTS
**TOLERANCE FOR CONSTRUCTION ±0.5%

NOTES
1. ADDITIONAL INFORMATION IS SHOWN ON THE UTILITY PLANS AND IN THE ELECTRICAL COMPONENT OF THE BRIDGE PLANS.

PLOTTED: 10/23/2013 9:26 AM BY: ALEXANDER_CURRIMJEE
DRAWING: P:\KRSS-PROJ\MASSHIGHWAY\2002 SERIES\CH 2\SESION 2\CHATHAM BRIDGE\400 CADD - CIS - GRAPHICS\BID CADD\69369\BID\DWG\TYPICAL SECTIONS.DWG [TYPICAL SECTIONS - 3] 10/14/2013 10:45 AM BY: HARDER, HANANDI

CHATHAM
BRIDGE STREET

| STATE | FED. AID PROJ. NO. | SHEET NO. | TOTAL SHEETS |
|---|---|---|---|
| MASS. | NHP-002S(539) | 7 | 214 |
| PROJECT FILE NO. 603690 | | | |

# TYPICAL SECTIONS
## SHEET 4 OF 4

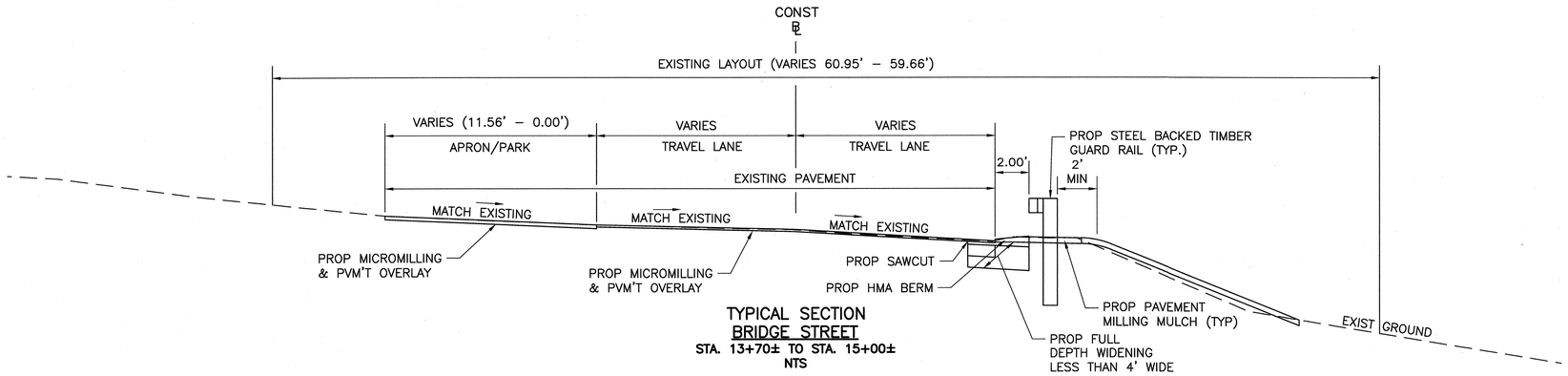


**TYPICAL SECTION**
**BRIDGE STREET**
**STA. 13+70± TO STA. 15+00±**
**NTS**

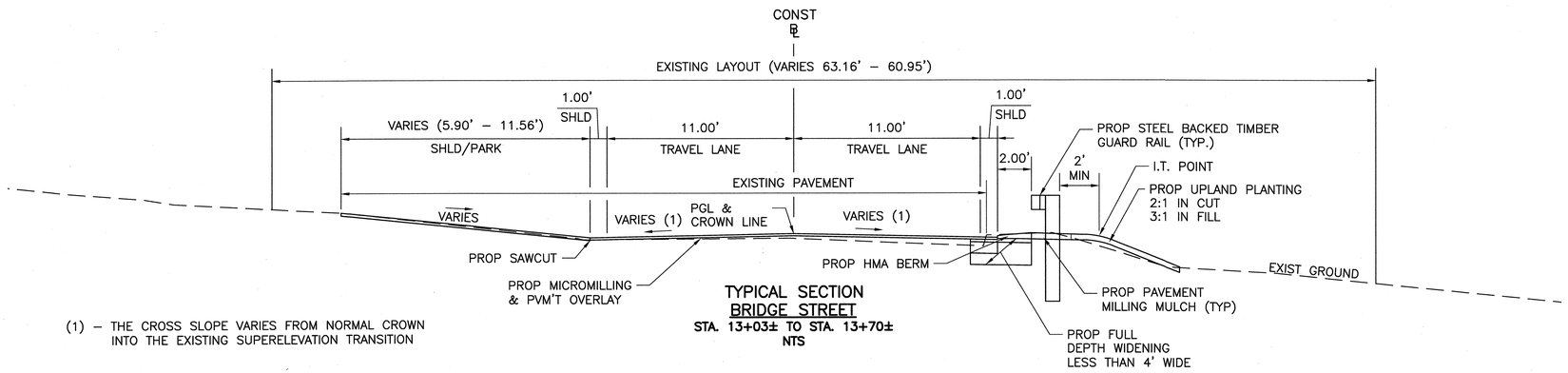


(1) – THE CROSS SLOPE VARIES FROM NORMAL CROWN INTO THE EXISTING SUPERELEVATION TRANSITION

**TYPICAL SECTION**
**BRIDGE STREET**
**STA. 13+03± TO STA. 13+70±**
**NTS**

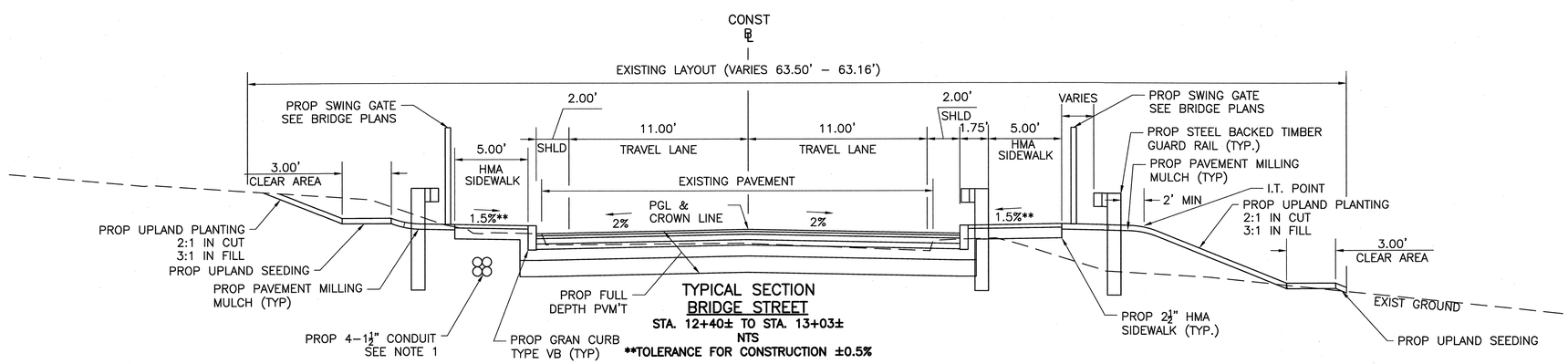


**TYPICAL SECTION**
**BRIDGE STREET**
**STA. 12+40± TO STA. 13+03±**
**NTS**
****TOLERANCE FOR CONSTRUCTION ±0.5%**

PLOTTED: 10/23/2013 9:26 AM BY: ALEXANDER, CURRIMJEE
DRAWING: P:\JOBS-FED\MASSHIGHWAY\2009 SERIES\H &\CHATHAM BRIDGE\500 CADD - DGS - GRAPHICS\510 CADD\BG539\VID\DWG\TYPICAL SECTIONS\TYPICAL SECTIONS - 4 10/14/2013 10:45 AM BY: HARDER, HANNAH

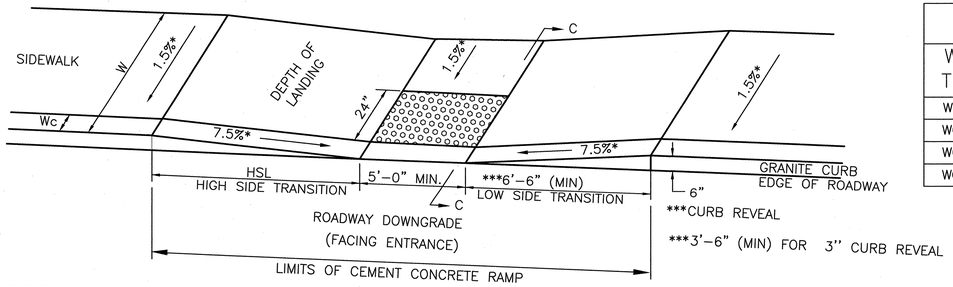


LEGEND

HSL = HIGH SIDE FRONT TRANSITION LENGTH (SEE E 107.9.0)

W = SIDEWALK WIDTH

Wc = CURB WIDTH

* = TOLERANCE FOR CONSTRUCTION ±0.5%

USABLE SIDEWALK WIDTH PER AAB = W-Wc

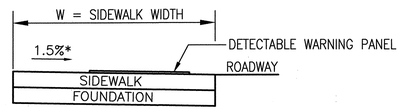


SECTION C-C

## WHEELCHAIR RAMP DETAIL (TYPE A)

NTS

| WHEELCHAIR RAMP DATA | | | | | | | |
|---|---|---|---|---|---|---|---|
| WCR ID TYPE(#) | STATION | OFFSET | R/L | ROADWAY PROFILE GRADE | HSL (FT) | LSL (FT) | W (FT) |
| WCR-1 (B) | 8+12 | 13.00' | LT | 0.85% ± | 7.67 | N/A | 5.5 |
| WCR-2 (B) | 8+12 | 13.00' | RT | 0.85% ± | 7.67 | N/A | 5.5 |
| WCR-3 (B) | 12+94 | 13.00' | LT | 1.95% ± | N/A | 6.50 | 5.5 |
| WCR-4 (A) | 13+14 | 13.00' | RT | 2.87% ± | 11.00 | 6.50 | 5.5 |

## GENERAL WHEELCHAIR RAMP NOTES:

1. ROADWAY CROSSWALK CROSS SLOPES, FOR BRICK, CEMENT CONCRETE, AND BITUMINOUS CONCRETE, AS INDICATED IN THE STANDARD SPECIFICATIONS, WILL BE 1.5%. A CONSTRUCTIONS TOLERANCE OF ±0.5% IS ACCEPTABLE FOR ROADWAY SIDEWALKS. (REFER TO STANDARD SPECIFICATIONS FOR HIGHWAY AND BRIDGES, SECTION 700.) IN ACCORDANCE WITH 521 CMR THE RULES AND REGULATIONS OF THE ARCHITECTURAL ACCESS BOARD (AAB), THE SIDEWALK CROSS SLOPE CANNOT EXCEED 2.0%.
2. AN UNOBSTRUCTED PATH OF TRAVEL WITH A MINIMUM WIDTH OF 3'-3" SHALL BE MAINTAINED PAST ALL OBSTRUCTIONS (UTILITY POLES, SIGNS, SIGNAL FOUNDATIONS, MASTS, MAILBOXES, ALONG DRIVE OPENINGS, ETC.). CONTRACTOR TO REMOVE AND RESET ALL OBSTRUCTIONS.
3. THE WHEELCHAIR RAMP SLOPES AND SIDE SLOPES (TRANSITIONS) WILL BE 7.5% WITH A CONSTRUCTIONS TOLERANCE OF ±0.5%. HOWEVER, THESE SLOPES MAY BE FLATTER WHEN WARRANTED BY SURROUNDING CONDITIONS.
4. WHERE THE ROAD PROFILE EXCEEDS 4%, THE HIGH SIDE TRANSITION LENGTH UNDER ANY CONDITIONS SHALL NOT EXCEED 15'-0".
5. IN NO CASE WHERE A STOP LINE IS WARRANTED, SHALL A RAMP BE PLACED ON THE TRAFFIC APPROACH SIDE OF THAT STOP LINE.
6. FIXED OBJECTS (I.E. UTILITY POLES, HYDRANTS, SIGNS, SIGNAL FOUNDATIONS, ETC.) MUST NOT ENCROACH ON ANY PART OF THE WHEELCHAIR RAMP INCLUDING TRANSITION SLOPES.
7. AT NO TIME IS ANY PART OF THE WHEELCHAIR RAMP, EXCLUDING CURB TRANSITIONS, TO BE LOCATED OUTSIDE THE CROSSWALK. THE WHEELCHAIR RAMP ENTRANCE IS TO BE CENTERED IN THE CROSSWALK WHENEVER POSSIBLE
8. CATCH BASINS WHICH ARE TO BE LOCATED IN THE VICINITY OF A WHEELCHAIR RAMP SHALL BE LOCATED UPGRADE OF THE RAMP ENTRANCE.
9. THE ENTRANCE OF A WHEELCHAIR RAMP SHALL BE FLUSH WITH THE ROADWAY.
10. TESTING SURFACE: WHEN TESTING WITH A STRAIGHTEDGE PLACED PARALLEL TO THE LINE OF THE SLOPE THERE SHALL BE NO DEVIATION FROM A TRUE SURFACE IN EXCESS OF 1/4".
11. STATION LOCATION REFERENCE POINT IS LOCATED AT THE CENTERLINE OF FLUSH ENTRANCE OPENING OF WHEELCHAIR RAMP.
12. SEE BRIDGE PLANS FOR TRANSITION RAMPS BETWEEN BRIDGE WOODEN SIDEWALK AND HIGHWAY GRANITE CURBED SIDEWALK.

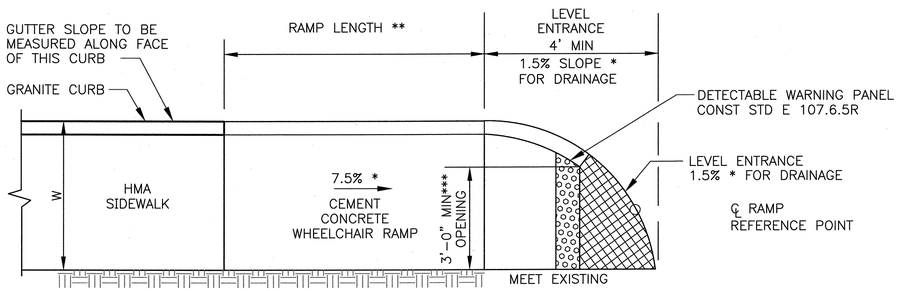


NOTES:
* CONSTRUCTION TOLERANCE ± 0.5%
** SEE CONSTRUCTION STANDARD E 107.9.0
*** SEE CONSTRUCTION STANDARD E 107.6.0R

## CEMENT CONCRETE WHEELCHAIR RAMP (TYPE B)
## SINGLE DIRECTION
## WITH STREET LEVEL ENTRANCE

NTS

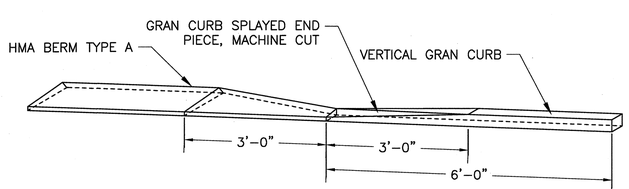


## GRANITE TRANSITION
## HMA BERM – SPLAYED END

NTS

| SIDEWALK TRANSITION AT THE BRIDGE DATA | | | | | | | | | | | | |
|---|---|---|---|---|---|---|---|---|---|---|---|---|
| BRIDGE TRAN ID# | A | | | B | | | C | | | D | | |
| | STATION | OFFSET | ELEVATION | STATION | OFFSET | ELEVATION | STATION | OFFSET | ELEVATION | STATION | OFFSET | ELEVATION |
| TRAN-1 | 9+57.41 | 13.50 | 8.85 | 9+57.41 | 19.75 | 8.85 | 9+63.91 | 13.50 | 8.53 | 9+63.91 | 19.75 | 8.53 |
| TRAN-2 | 9+57.41 | 13.50 | 8.85 | 9+57.41 | 19.75 | 8.85 | 9+63.91 | 13.50 | 8.53 | 9+63.91 | 19.75 | 8.53 |
| TRAN-3 | 11+71.07 | 13.50 | 11.60 | 11+71.07 | 19.75 | 11.60 | 11+64.57 | 13.50 | 11.17 | 11+64.57 | 19.75 | 11.17 |
| TRAN-4 | 11+71.07 | 13.50 | 11.60 | 11+71.07 | 19.75 | 11.60 | 11+64.57 | 13.50 | 11.17 | 11+64.57 | 19.75 | 11.17 |

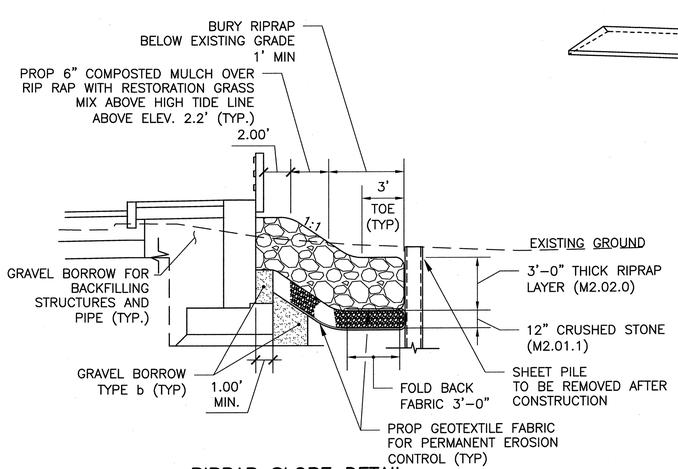


## RIPRAP SLOPE DETAIL

NTS

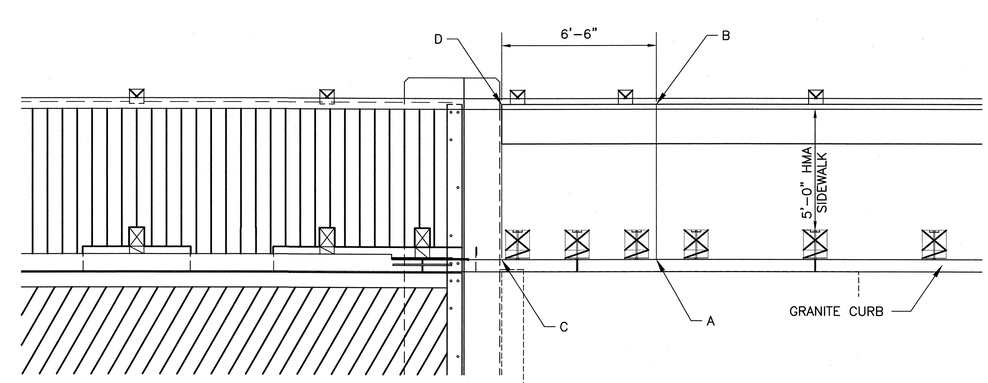


PLOTTED: 10/23/2013 9:26 AM BY: ALEXANDER.CURRIMJEE
DRAWING: P:\CBS-GEN\MASSHIGHWAY\2009 SERIES\W 5\ASSISN #1 - CHATHAM BRIDGE\800 CADD - GS - GRAPHICS\810 CADD\60360\VIEWS\TYPICAL SECTIONS\DWG DETAILS - 11\10/14/2013 10:45 AM BY: HARDER.HAMANDI

CHATHAM
BRIDGE STREET

| STATE | FED. AID PROJ. NO. | SHEET NO. | TOTAL SHEETS |
|---|---|---|---|
| MASS. | NHP-002S(539) | 9 | 214 |
| PROJECT FILE NO. 603690 | | | |

CONSTRUCTION DETAILS
SHEET 2 OF 8

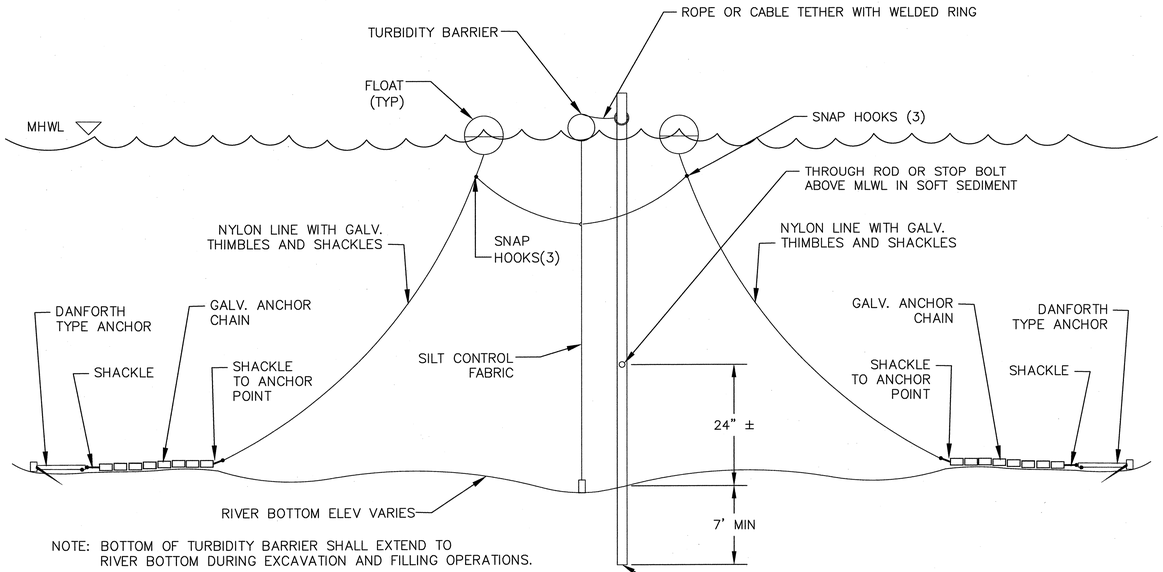


NOTE: BOTTOM OF TURBIDITY BARRIER SHALL EXTEND TO RIVER BOTTOM DURING EXCAVATION AND FILLING OPERATIONS.

## ANCHOR

NTS

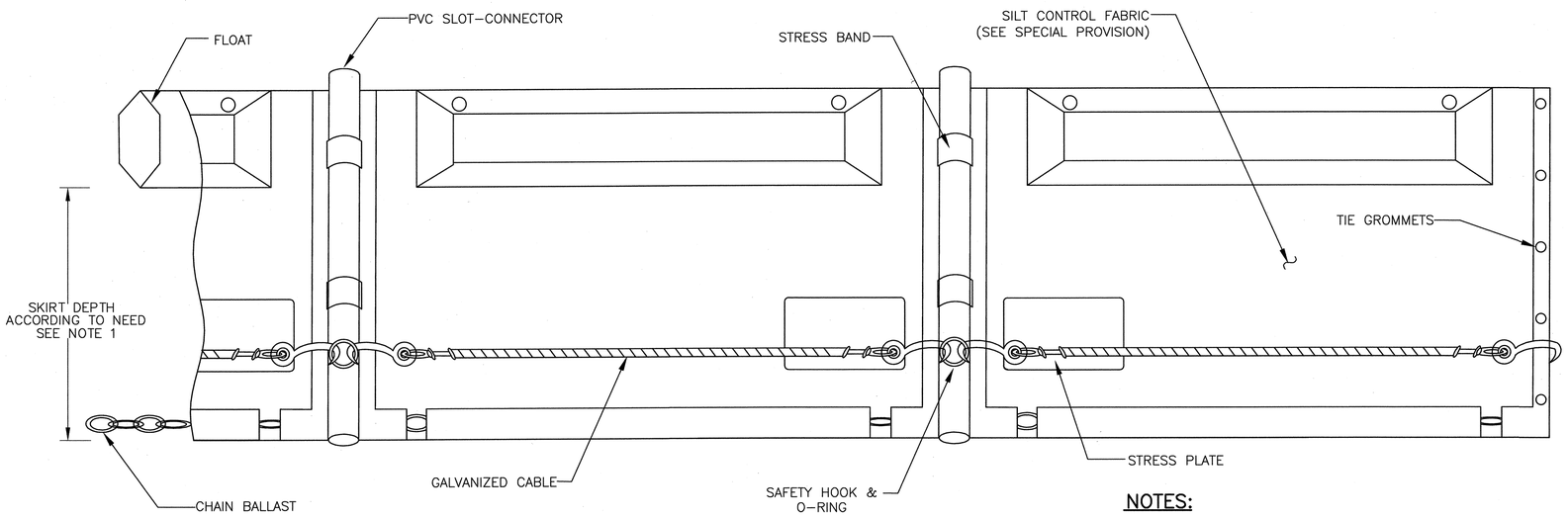


## NOTES:

1. TURBIDITY BARRIER DEPTH VARIES. TURBIDITY BARRIER SHALL EXTEND FROM OCEAN BOTTOM TO WATER SURFACE DURING EXCAVATION AND FILLING OPERATIONS.
2. INSTALL PER MANUFACTURER'S RECOMMENDATION.

## TURBIDITY BARRIER DETAIL

NTS

PLOTTED: 10/23/2013 9:28 AM BY: ALEXANDER.CURRIMJEE
DRAWING: P:\OBS-SEP\MASSHIGHWAY\2009 SEDRSON SUVASION #1 - CHATHAM BRIDGE\300 CADD - OS - GRAPHICS\310 CADD\030890\HDV\WO\TYPICAL SECTIONS\DWG DETAILS - 2\10/14/2013 10:45 AM BY: HARDER.HAMAND

CHATHAM
BRIDGE STREET

| STATE | FED. AID PROJ. NO. | SHEET NO. | TOTAL SHEETS |
|---|---|---|---|
| MASS. | NHP-002S(539) | 10 | 214 |
| PROJECT FILE NO. 603690 | | | |

CONSTRUCTION DETAILS
SHEET 3 OF 8

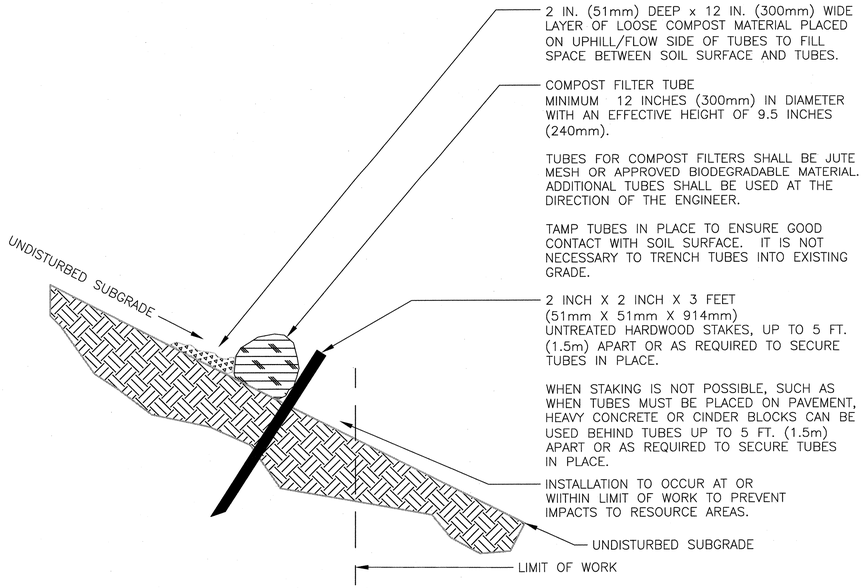


SECTION VIEW

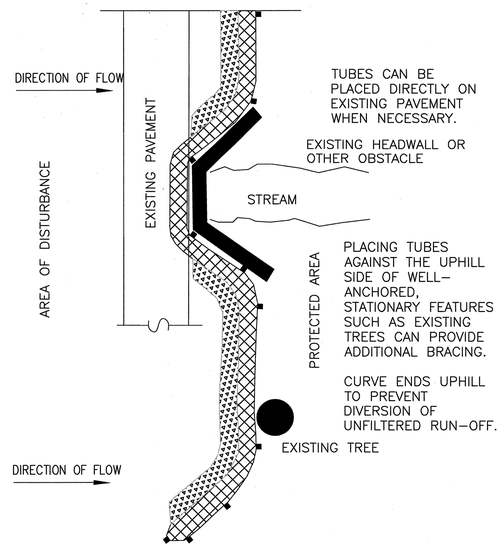


PLAN VIEW

## SINGLE COMPOST FILTER TUBE DETAIL

GENERAL NOTES:

1. PROVIDE A MINIMUM TUBE DIAMETER OF 12 INCHES (300mm) FOR SLOPES UP TO 50 FEET (15.24m) IN LENGTH WITH A SLOPE RATIO OF 3H:1V OR STEEPER. LONGER SLOPES OF 3H:1V MAY REQUIRE LARGER TUBE DIAMETER OR ADDITIONAL COURSING OF FILTER TUBES TO CREATE A FILTER BERM. REFER TO MANUFACTURER'S RECOMMENDATIONS FOR SITUATIONS WITH LONGER OR STEEPER SLOPES.
2. INSTALL TUBES ALONG CONTOURS AND PERPENDICULAR TO SHEET OR CONCENTRATED FLOW.
3. DO NOT INSTALL IN PERENNIAL, EPHEMERAL OR INTERMITTENT STREAMS.
4. CONFIGURE TUBES AROUND EXISTING SITE FEATURES TO MINIMIZE SITE DISTURBANCE AND MAXIMIZE CAPTURE AREA OF STORMWATER RUN-OFF.

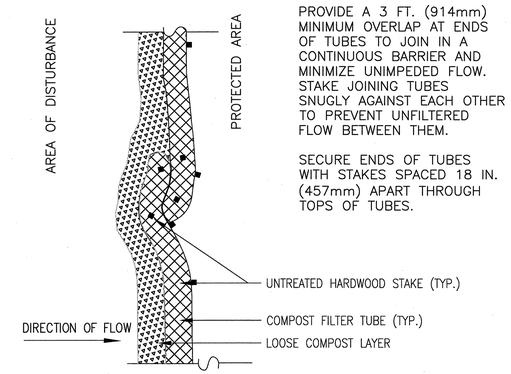


PLAN VIEW – JOIN DETAIL

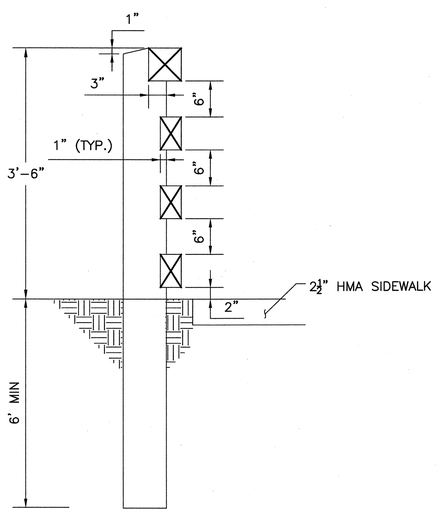


## SIDEWALK TIMBER PEDESTRIAN RAILING DETAIL

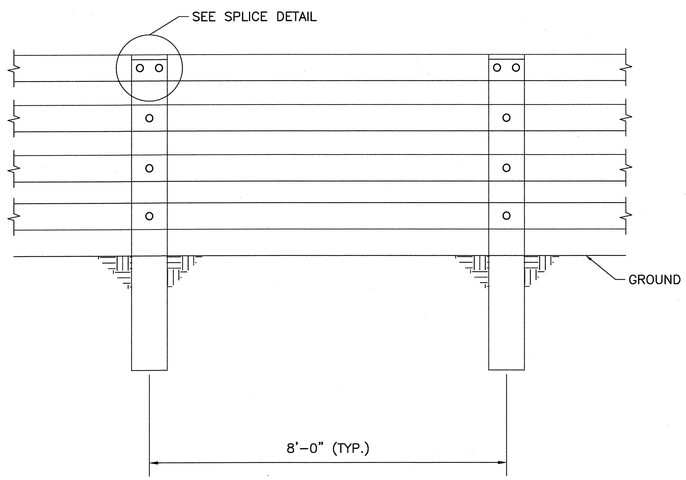


## SIDEWALK TIMBER PEDESTRIAN RAILING ELEVATION

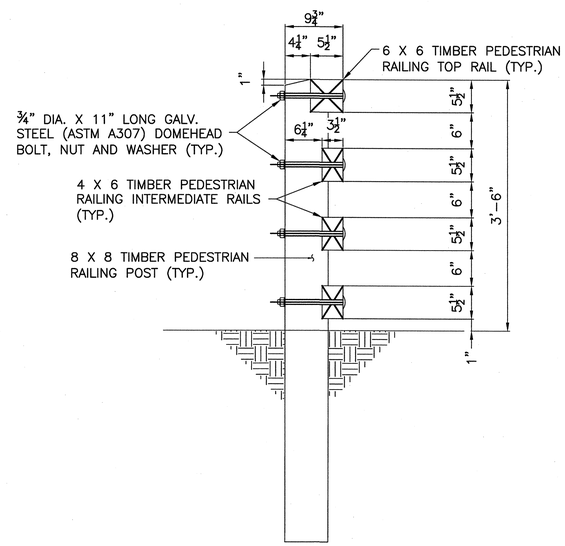


## CONNECTION DETAIL

SECTION 91
SEE BRIDGE PLANS SHEET 113

## RAILING SPLICE DETAIL

PLOTTED: 10/23/2013 9:26 AM BY: ALEXANDER.CURRIMJEE
DRAWING: P:\KBSC-PRJ\MASSHIGHWAY\00539 SERBSCM &VASSISH #1 - CHATHAM BRIDGE\500 CADD - GIS - GRAPHICS\610 CADD\603690\HPD\DWG\TYPICAL SECTIONS\DWG DETAILS - 31 10/14/2013 10:45 AM BY: HARDER.HAMAND

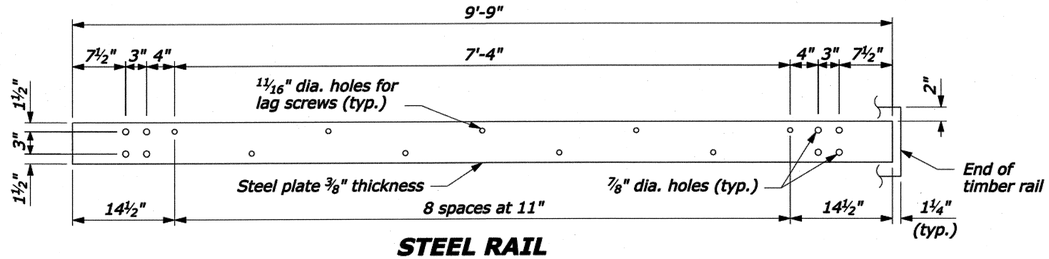


**STEEL RAIL**

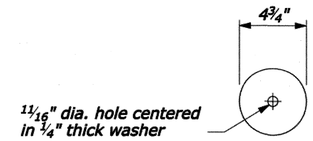


**PLATE WASHER**

## NOTE:

1. Use the Type A, blocked-out, system or the Type B, non-blocked-out, system as specified in the plans.
2. Use weathering steel for all structural steel and fastener hardware as specified.
3. Place a terminal section (See Standards 617-61 and 617-62) on both approach and trailing ends of barrier installations.

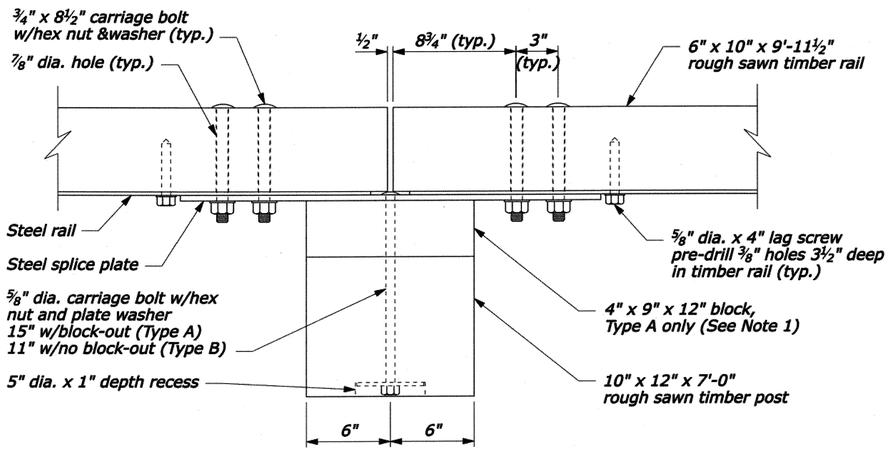


**PLAN**

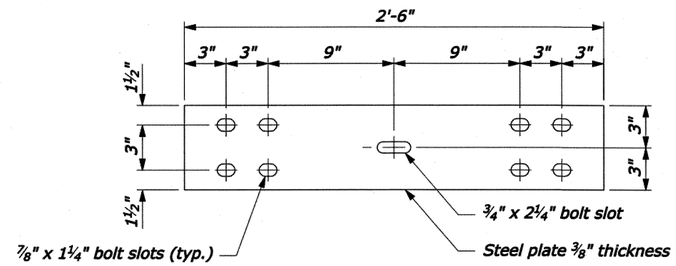


**STEEL SPLICE PLATE**

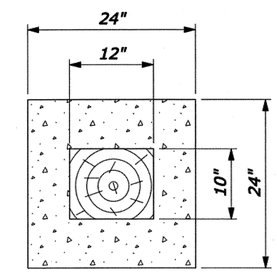


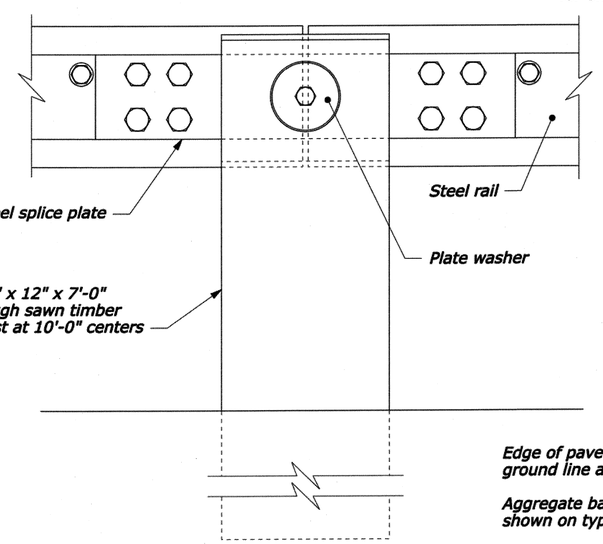


ELEVATION
**POST CONNECTION**

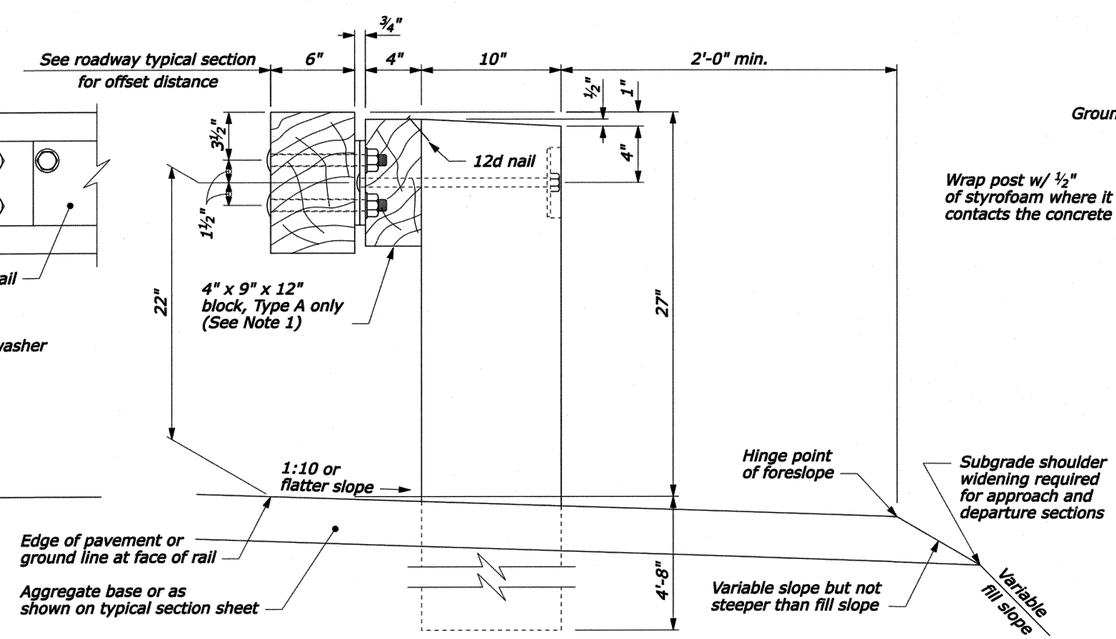


**TYPICAL GUARDRAIL CROSS SECTION**

NO SCALE

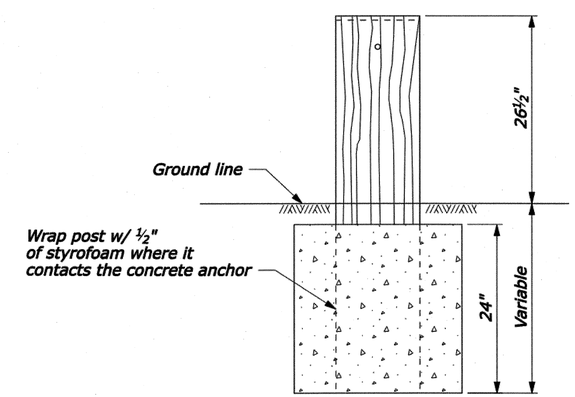


24" dia. round anchor is an acceptable alternative.
Reduced size acceptable in solid rock.

**CONCRETE ANCHOR FOR SHORT GUARDRAIL POST**

U.S. DEPARTMENT OF TRANSPORTATION
FEDERAL HIGHWAY ADMINISTRATION
FEDERAL LANDS HIGHWAY

U.S. CUSTOMARY STANDARD

# STEEL-BACKED TIMBER GUARDRAIL TYPE A & TYPE B

STANDARD APPROVED FOR USE 3/1990
REVISED: 4/1994 6/2005

STANDARD 617-60

PLOTTED: 10/23/2013 9:26 AM BY: ALEXANDER, CURRMJEE
DRAWING: P:\KSRE-PRV\MASSHIGHWAY\2002 SERIESCM &VERSION #1 - CHATHAM BRIDGE\KSRD CARD - DTS - GRAPHICS\610 CARDS\603690\NHP\DWG\TYPICAL SECTIONS.DWG TOFTAS - 41 10/14/2013 10:45 AM BY: HAUPER-HUMANDI

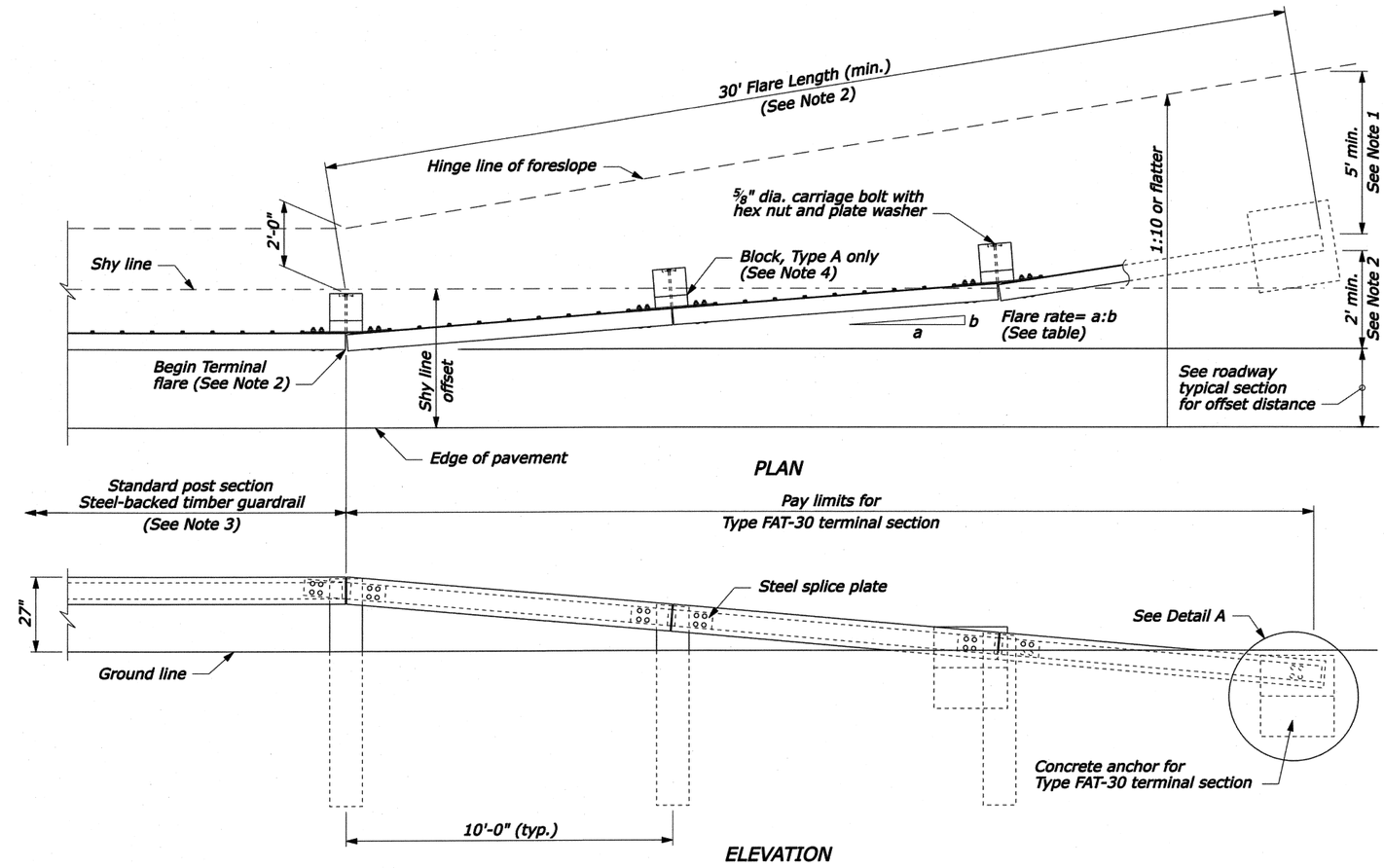


## APPROACH & DEPARTURE FLARE WITH FLARED ANCHOR TERMINAL (FAT)

## NOTE:

1. Extend the fill widening a minimum of 5 feet behind the guardrail, unless otherwise directed by the CO.
2. The guardrail flare shown in the plan view is the minimum length and rate required. As directed by the CO, flare the guardrail so that the terminal section is outside the clear zone. If the terminal section cannot be located outside the clear zone, it should be flared as far as practical from the road at the maximum rate indicated on the Guardrail Flare Rates table.
3. See Standard 617-60, Steel-Backed Timber Guardrail, Type SBTA and SBTB, for timber, structural steel, and hardware details.
4. On the Type A, blocked-out guardrail, include the blocks in terminal section, except on the concrete anchor. For the Type B, non-blocked-out guardrail, no blocks are included.

### GUARDRAIL FLARE RATE TABLE

| Design Speed (mph) | Shy line offset (ft) | Flare rate inside shy line (a:b) | Flare rate outside shy line (a:b) |
|---|---|---|---|
| 60 | 8.0 | 26:1 | 14:1 |
| 50 | 6.5 | 21:1 | 11:1 |
| 40 | 5.0 | 16:1 | 8:1 |
| 30 and less | 3.5 | 13:1 | 7:1 |

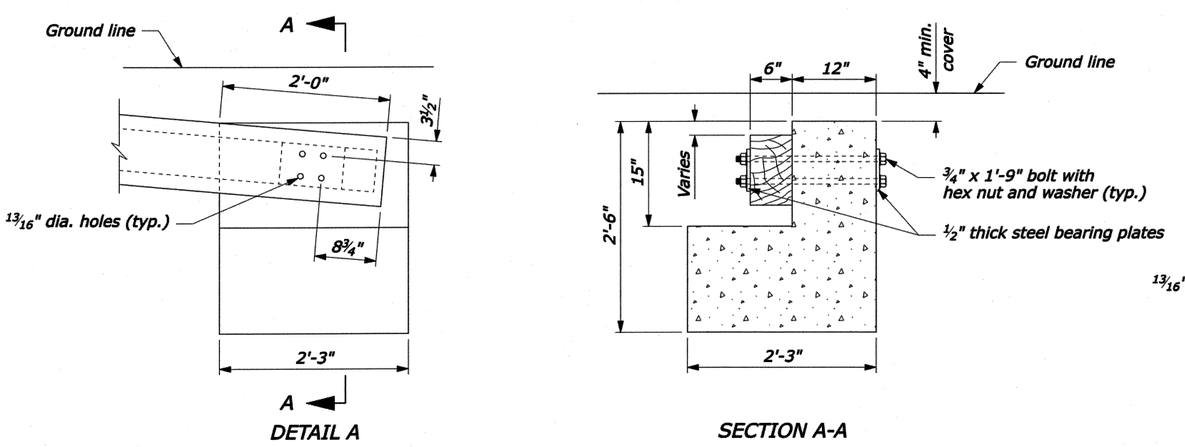


## CONCRETE ANCHOR

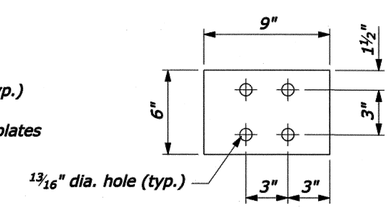


## STEEL BEARING PLATE

NO SCALE

U.S. DEPARTMENT OF TRANSPORTATION
FEDERAL HIGHWAY ADMINISTRATION
FEDERAL LANDS HIGHWAY

U.S. CUSTOMARY STANDARD

# STEEL-BACKED TIMBER GUARDRAIL TERMINAL SECTION TYPE SBT FAT-30

STANDARD APPROVED FOR USE 1/1990
REVISED: 4/1994 6/2005

STANDARD 617-61

PLOTTED: 10/23/2013 9:26 AM BY: ALEXANDER, CURRIMJEE
DRAWING: P:\KORS-SER\MASSHIGHWAY\2002-SERIES\CH_SA1SERIES\ 617 — CHATHAM BRIDGE\S-600-617.DGN — SIE — GRAPHICS\SA1SERIES\617\TYPICAL SECTIONS\DWG FILE\SA1S — 3/10/14/2013 10:45 AM BY: HARRIS, HAMANO

CHATHAM
BRIDGE STREET

| STATE | FED. AID PROJ. NO. | SHEET NO. | TOTAL SHEETS |
|---|---|---|---|
| MASS. | NHP-002S(539) | 13 | 214 |
| PROJECT FILE NO. 603690 | | | |

CONSTRUCTION DETAILS
SHEET 6 OF 8

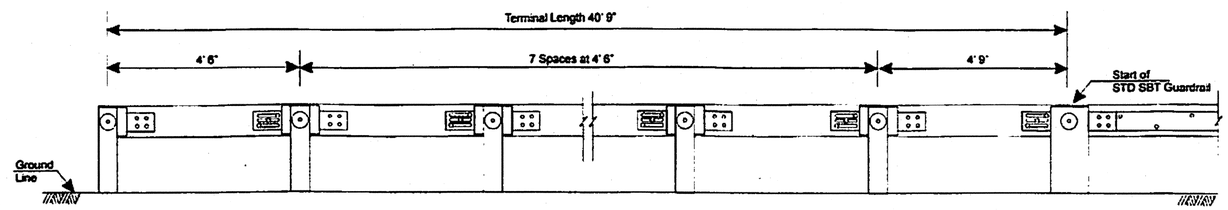


*Elevation*

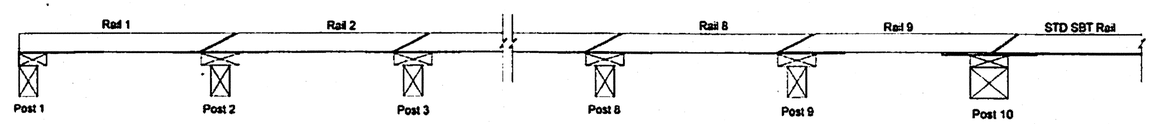


*Plan*

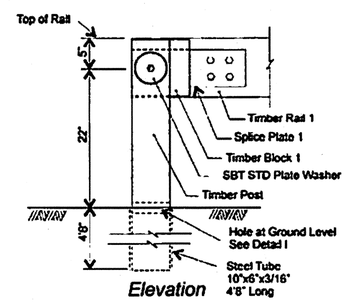


*Elevation*

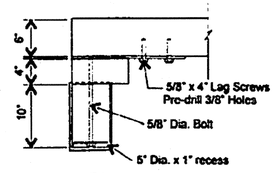


*Plan*

*Post/Rail Connection at Post 1*
*Detail A*

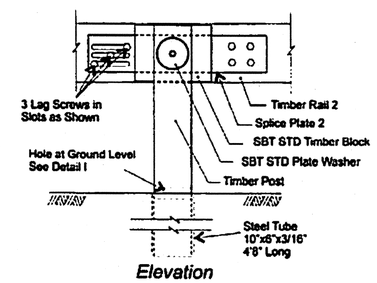


*Elevation*

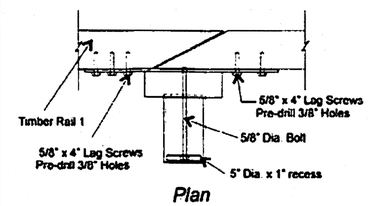


*Plan*

*Post/Rail Connection at Posts 2-9*
*Detail B*

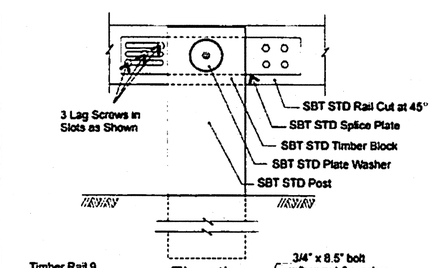


*Elevation*

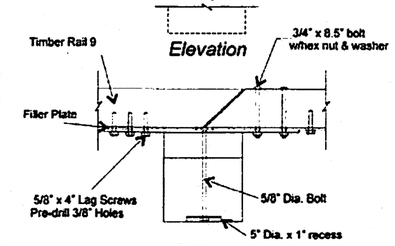


*Plan*

*Post/Rail Connection at Post 10*
*Detail C*

The National Crash Analysis Center
The George Washington University

**TL2 End-Terminal for**
**Steel-Backed Timber Guardrail**

Revised: 09/10/2009

Sheet 1 of 2

PLOTTED: 10/23/2013 9:28 AM BY: ALEXANDER_CURRIN.JEE
DRAWING: P:\DGS-GD\WASHBRIDWAY\2002_SERIES\A\ASSGN_#__CHATHAM_BRIDGE\500_CADD__DGS__GRAPHICS\510_CADD\500SERIES\HDV\DWG\TYPICAL_SECTIONS.DWG [DETAILS -- 8] 10/24/2013 10:45 AM BY: HANDER, HAMANN

CHATHAM
BRIDGE STREET

| STATE | FED. AID PROJ. NO. | SHEET NO. | TOTAL SHEETS |
|---|---|---|---|
| MASS. | NHP-002S(539) | 14 | 214 |
| PROJECT FILE NO. 603690 | | | |

CONSTRUCTION DETAILS
SHEET 7 OF 8

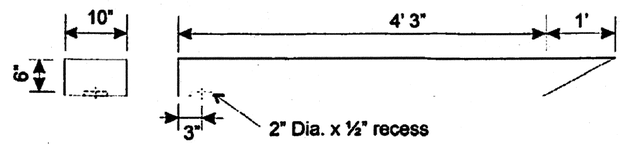


**Timber Rail 1**
**Detail D**

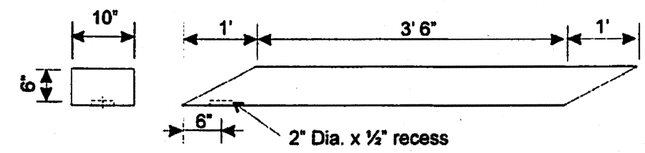


**Timber Rails 2 - 8**
**Detail E**

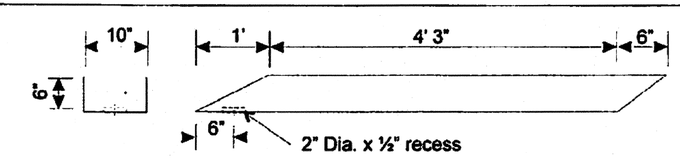


**Timber Rails 9**
**Detail F**

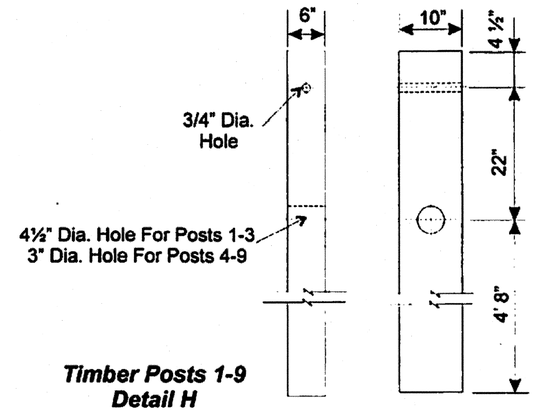


**Timber Posts 1-9**
**Detail H**

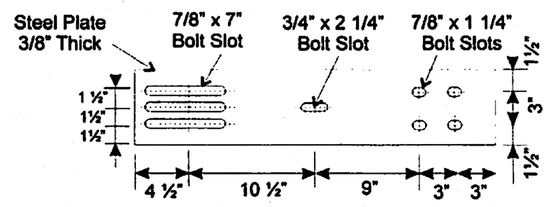


**Splice Plate at Posts 2 - 9**
**Detail I**

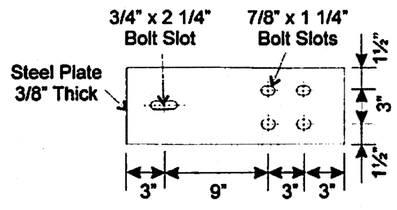


**Splice Plate at Post 1**
**Detail G**

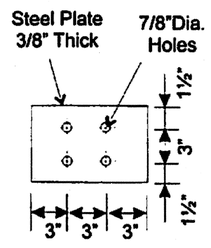


**Filler Plate at Post 10**
**Detail J**

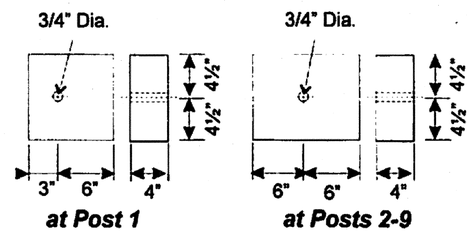


**at Post 1** **at Posts 2-9**

**Timber Block**
**Detail K**

The National Crash Analysis Center
The George Washington University

**TL2 End-Terminal for**
**Steel-Backed Timber Guardrail**

Revised: 09/10/2009

Sheet 2 of 2

PLOTTED: 10/23/2013 9:26 AM BY: ALEXANDER_CURRIMJEE
DRAWING: P:\VARS-GW\WASHSHWY\2009_SERSON_FLASSON_IT__CHATHAM_BRIDGE\500_CADD__DS__GRAPHICS\510_CADD\600S90\NHD\NHD\TYPICAL_SECTIONS.DWG [DETAILS -- 71.10/14/2013 10:45 AM BY: HAUPER_HANANS]

CHATHAM
BRIDGE STREET

| STATE | FED. AID PROJ. NO. | SHEET NO. | TOTAL SHEETS |
|---|---|---|---|
| MASS. | NHP-002S(539) | 15 | 214 |
| PROJECT FILE NO. 603690 | | | |

CONSTRUCTION DETAILS
SHEET 8 OF 8

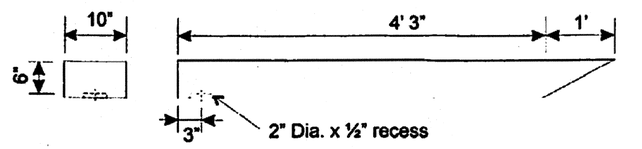


**Timber Rail 1**
**Detail D**

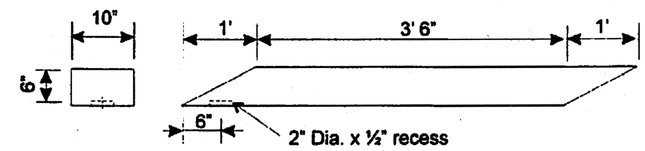


**Timber Rails 2 - 8**
**Detail E**

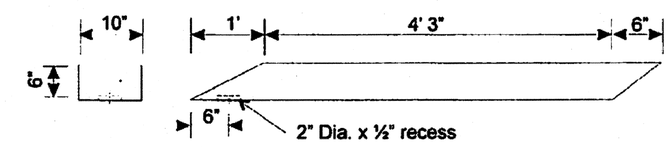


**Timber Rails 9**
**Detail F**

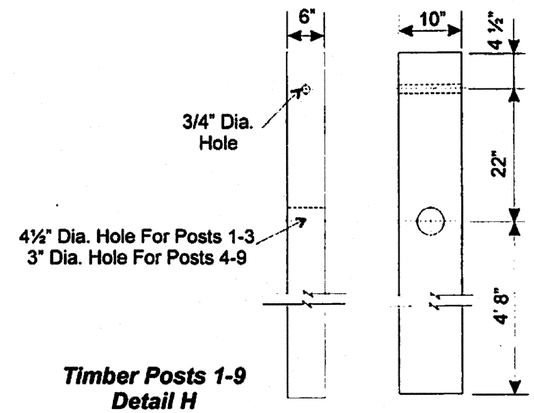


**Timber Posts 1-9**
**Detail H**

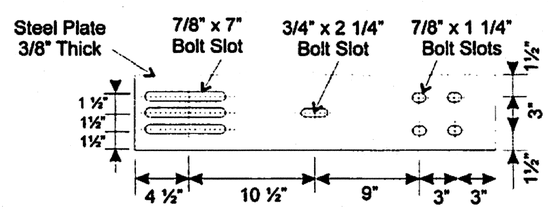


**Splice Plate at Posts 2 - 9**
**Detail I**

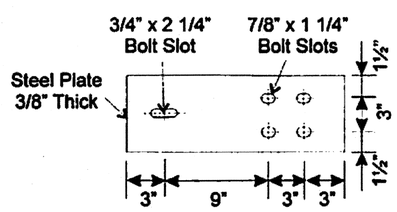


**Splice Plate at Post 1**
**Detail G**

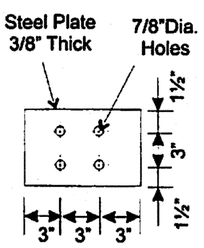


**Filler Plate at Post 10**
**Detail J**

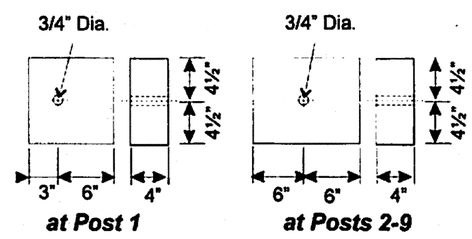


**at Post 1** **at Posts 2-9**

**Timber Block**
**Detail K**

The National Crash Analysis Center
The George Washington University

**TL2 End-Terminal for**
**Steel-Backed Timber Guardrail**

Revised: 09/10/2009 | Sheet 2 of 2

PLOTTED: 10/23/2013 9:26 AM BY: ALEXANDER, CURRIMJEE
DRAWING: P:\JOBS-GED\MASSHIGHWAY\2002 SERIES\NHP-002S(539) - CHATHAM BRIDGE\300-GADD - GS - GRAPHICS\310-GADD\GS539\VIS\VWG\TYPICAL SECTIONS.DWG (DETAILS - 8) 10/24/2013 10:45 AM BY: HARDER, HANNAH

CHATHAM
BRIDGE STREET

| STATE | FED. AID PROJ. NO. | SHEET NO. | TOTAL SHEETS |
|---|---|---|---|
| MASS. | NHP-002S(539) | 16 | 214 |
| PROJECT FILE NO. 603690 | | | |

CONSTRUCTION PLAN
SHEET 1 OF 2

## TIMBER HIGHWAY GUARD DETAILS

STA 8+29.79 13.0 LT TO STA 8+70.54 13.0 LT (TANGENT END TERMINAL, HIGHWAY ITEM)
STA 8+70.54 13.0 LT TO STA 9+40.74 13.0 LT (STEEL BACKED RAIL W/ 5' POST SPACING, BRIDGE ITEM)
STA 9+40.74 13.0 LT TO STA 9+67.24 13.0 LT (TRANSITION TO BRIDGE RAIL, BRIDGE ITEM)
STA 8+29.79 13.0 RT TO STA 8+70.54 13.0 RT (TANGENT END TERMINAL, HIGHWAY ITEM)
STA 8+70.54 13.0 RT TO STA 9+40.74 13.0 RT (STEEL BACKED RAIL TYPE A, HIGHWAY ITEM)
STA 9+40.74 13.0 RT TO STA 9+67.24 13.0 RT (TRANSITION TO BRIDGE RAIL, BRIDGE ITEM)

## DRAINAGE DETAILS

SEE UTILITY PLANS

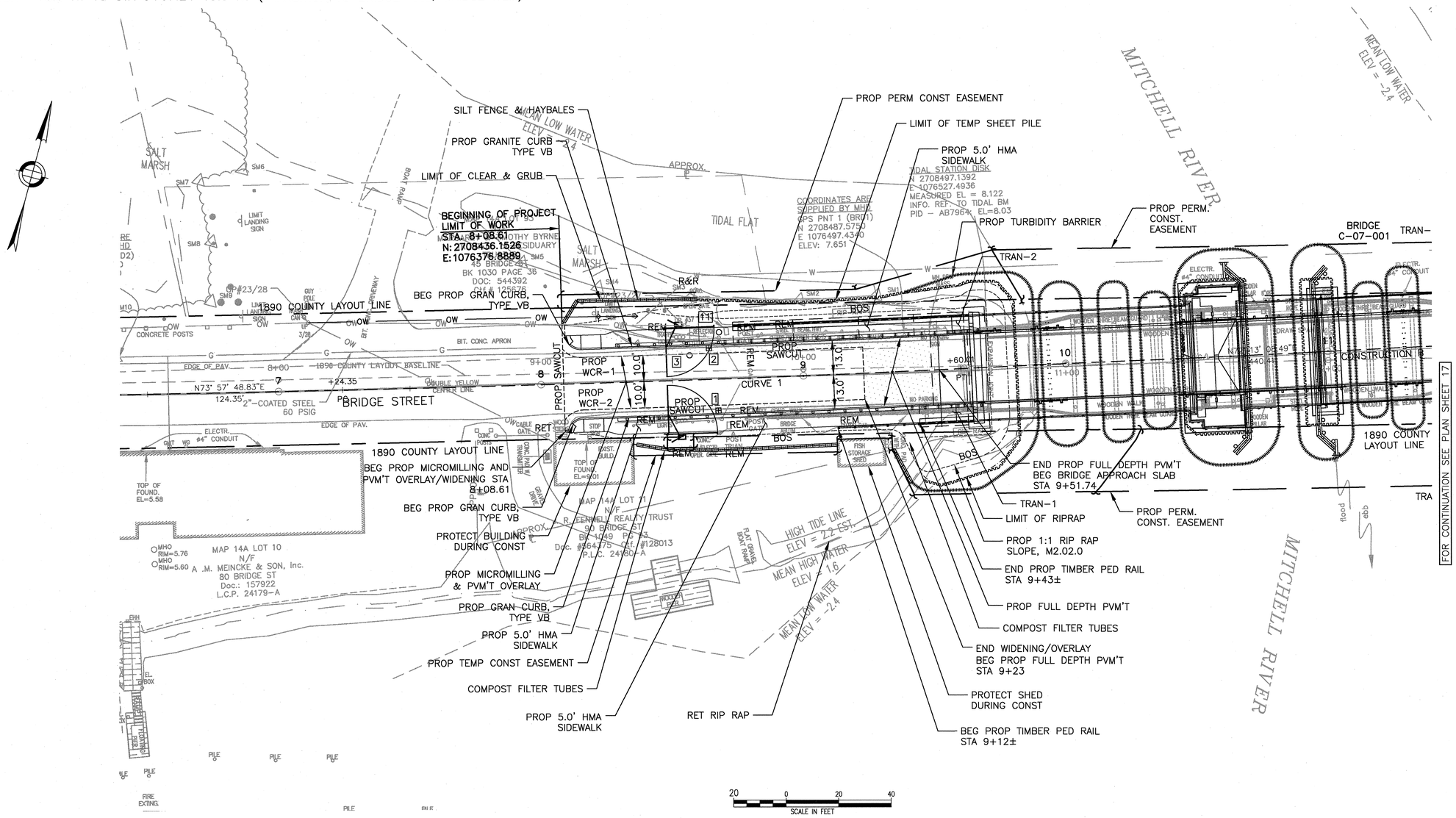


NOTES:

1. FOR TRANSITION DETAILS FROM VB CURB TO TL-2 BRIDGE RAIL, SEE SHEET 117 OF 173 OF BRIDGE DETAILS.
2. FOR SUBMARINE CABLE LOCATION AND DETAILS, SEE SHEET 169 OF 173 OF BRIDGE PLANS.
3. FOR ℄ CURVE & COORDINATE DATA SEE GRADING AND TIE PLANS
4. TRAN-1 & TRAN-2 INDICATES THE SIDEWALK TRANSITIONS AT THE BRIDGE SEE SHEET 8 FOR STATION, OFFSET & ELEVATIONS.

FOR PROFILE SEE SHEET 18

PLOTTED: 10/23/2013 9:27 AM BY: ALEXANDER, CURRIMJEE
DRAWING: P:\CRS-GRM\MASSHIGHWAY\2009 SHERBORN PASSING PL - CHATHAM BRIDGE\500 CAD\ - CRS - GRAPHICS\10 CAD\GA\GA561\01\PWG\CONSTRUCTION PLAN.DWG [CONSTRUCTION PLAN]

CHATHAM
BRIDGE STREET

| STATE | FED. AID PROJ. NO. | SHEET NO. | TOTAL SHEETS |
|---|---|---|---|
| MASS. | NHP-002S(539) | 17 | 214 |
| PROJECT FILE NO. 603690 | | | |

CONSTRUCTION PLAN
SHEET 2 OF 2

## TIMBER HIGHWAY GUARD DETAILS

STA 11+61.24 13.0 LT TO STA 11+87.74 13.0 LT (TRANSITION TO STEEL BACKED RAIL W/ 5' POST SPACING, BRIDGE ITEM)
STA 11+87.74 13.0 LT TO STA 12+07.74 13.0 LT (STEEL BACKED RAIL W/ 5' POST SPACING, BRIDGE ITEM)
STA 12+07.74 13.0 LT TO STA 12+48.49 13.0 LT (TANGENT END TERMINAL, HIGHWAY ITEM)
STA 12+10.07 20.0 LT TO STA 12+51.43 20.0 LT (STEEL BACKED RAIL TYPE A, HIGHWAY ITEM)
STA 12+57.28 20.0 LF TO STA 12+87.28 24.0 LT (STEEL BACKED RAIL TYPE A, HIGHWAY ITEM)
STA 11+61.24 13.0 RT TO STA 11+87.29 13.0 RT (TRANSITION TO STEEL BACKED RAIL W/ 5' POST SPACING, BRIDGE ITEM)
STA 11+87.74 13.0 RT TO STA 12+57.74 13.0 RT (STEEL BACKED RAIL W/ 5' POST SPACING, BRIDGE ITEM)
STA 12+57.74 13.0 RT TO STA 12+98.49 13.0 RT (TANGENT END TERMINAL, HIGHWAY ITEM)
STA 12+84.50 23.0 RT TO STA 13+15.34 16.0 RT (BURIED END TERMINAL, HIGHWAY ITEM)
STA 13+15.34 16.0 RT TO STA 14+70.10 13.5 RT (STEEL BACKED RAIL TYPE A, HIGHWAY ITEM)
STA 14+70.10 13.5 RT TO STA 15+00.00 15.5 RT (BURIED END TERMINAL, HIGHWAY ITEM)

## DRAINAGE DETAILS

UTILITY PLANS

## WATER SUPPLY ALTERATIONS

UTILITY PLANS

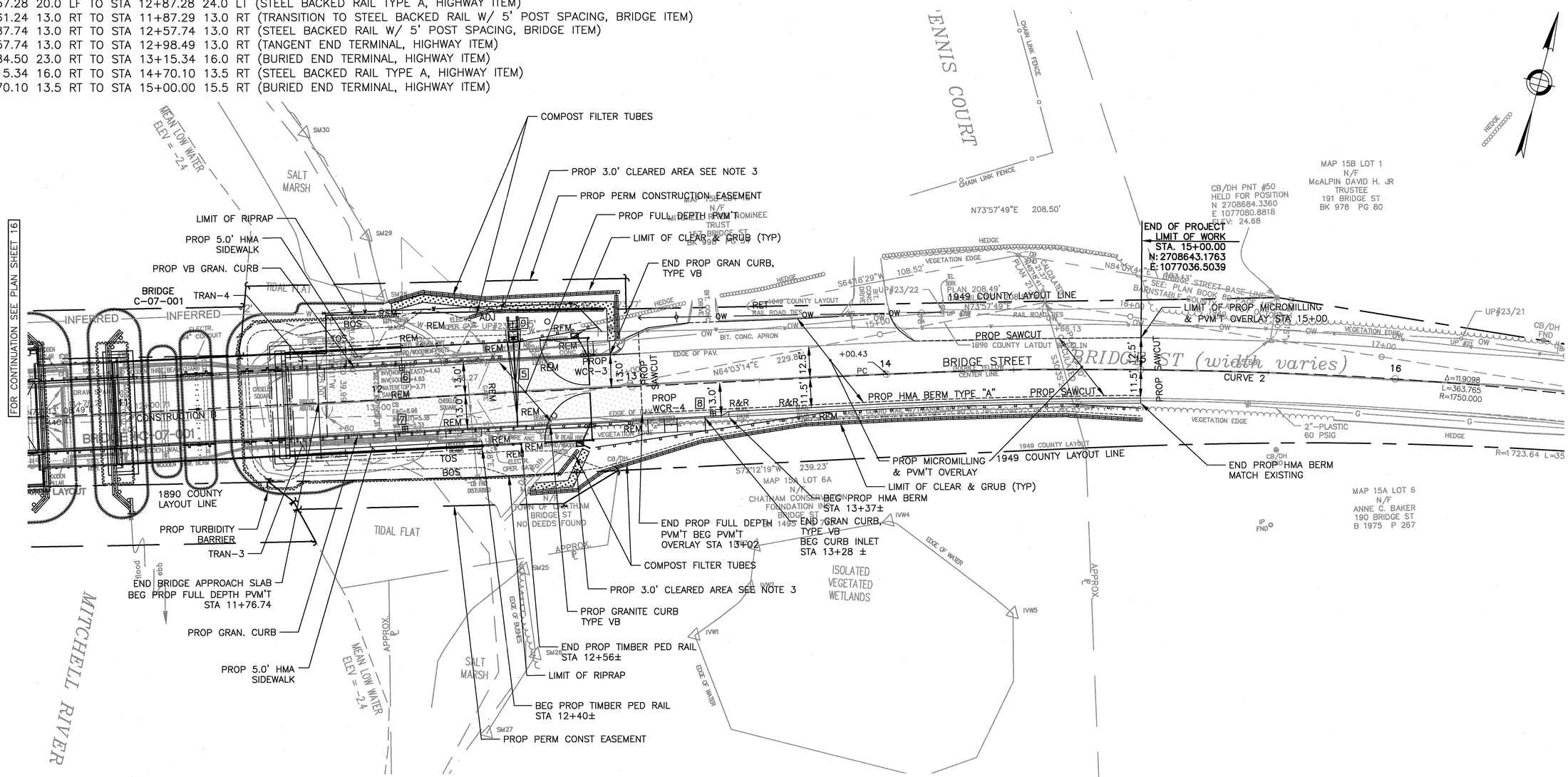


NOTES:

1. FOR TRANSITION DETAILS FROM VB CURB TO TL-2 BRIDGE RAIL, SEE SHEET 117 OF 173 OF BRIDGE DETAILS.
2. FOR SUBMARINE CABLE LOCATION AND DETAILS, SEE SHEET 169 OF 173 OF BRIDGE PLANS.
3. THE CLEAR AREA MUST BE MAINTAINED THROUGHOUT CONSTRUCTION. SEE THE TEMPORARY TRAFFIC CONTROL PLAN SHEET.
4. FOR ℄ CURVE & COORDINATE DATA SEE GRADING AND TIE PLANS
5. TRAN-3 & TRAN-4 INDICATES THE SIDEWALK TRANSITIONS AT THE BRIDGE SEE SHEET 8 FOR STATION, OFFSET & ELEVATIONS.

FOR PROFILE SEE SHEET 19

PLOTTED: 10/23/2013 9:27 AM BY: ALEXANDER, CURRIMJEE
DRAWING: P:\JOBS-BRI\MASSHIGHWAY\2009 SEDRSON ALVASSON JB - CHATHAM BRIDGE\002 (2ND) - DS - GRAPHICS\STD CADD\DGNS\HDV\WDV\CONSTRUCTION PLAN DWG\CONSTRUCTION PLAN - 2 10/22/2013 8:01 AM BY: HARDER, HAMANO

CHATHAM
BRIDGE STREET

| STATE | FED. AID PROJ. NO. | SHEET NO. | TOTAL SHEETS |
|---|---|---|---|
| MASS. | NHP-002S(539) | 18 | 214 |
| PROJECT FILE NO. 603690 | | | |

# PROFILE – BRIDGE STREET
SHEET 1 OF 2

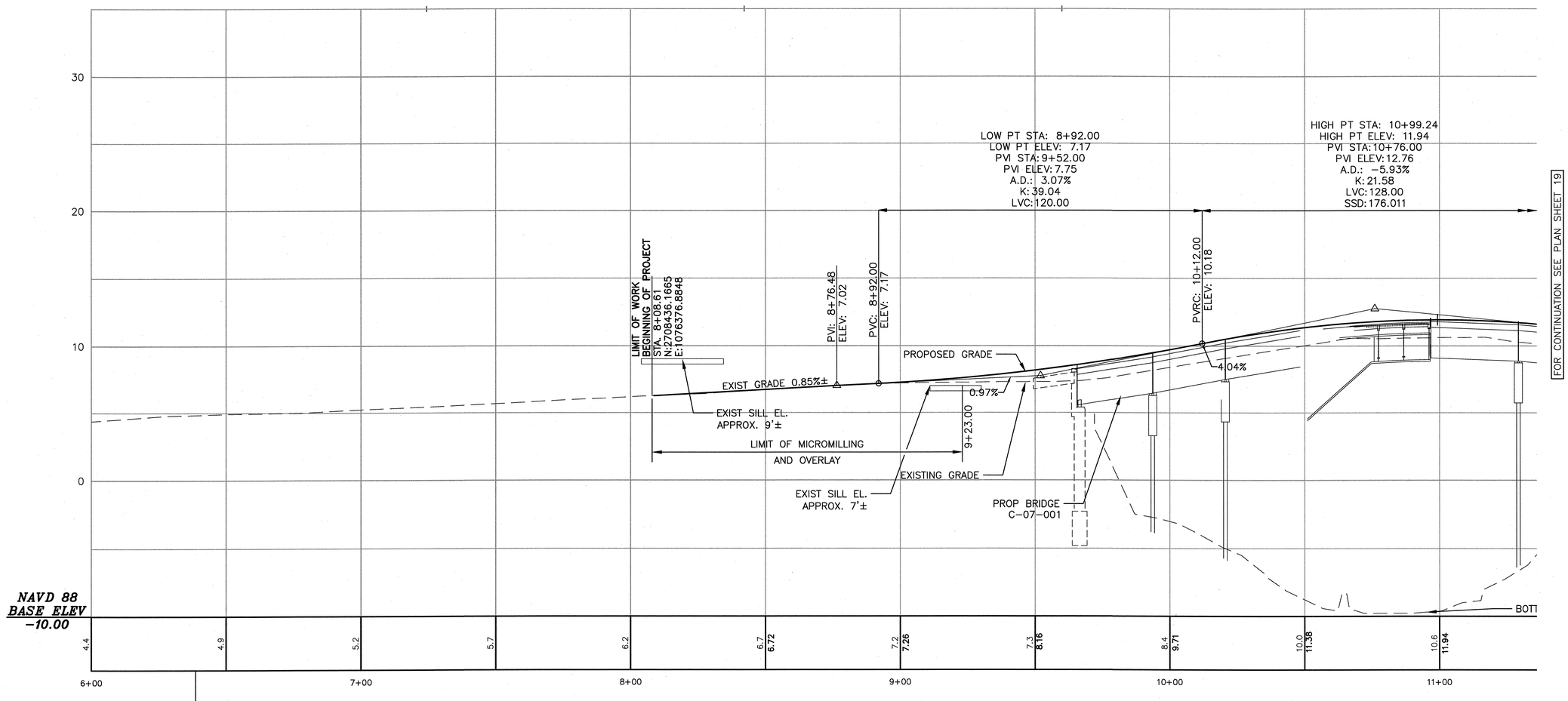


TEMP BENCHMARK #1
GPS POINT 2 (BRD2)
STA. 6+39.66 13.49 LT
N: 2708401.8800
E: 1076210.9450
ELEV = 4.711

HORIZONTAL
20 0 20 40
4 0 4 8
VERTICAL
SCALE IN FEET

FOR CONSTRUCTION PLAN SEE SHEET 16

PLOTTED: 10/23/2013 9:27 AM BY: ALEXANDER.CURRIMJEE
DRAWING: P:\JOBS-BRI\MASSHIGHWAY\002 BRIDGE\PLANS\CHATHAM BRIDGE\500-2400 - GS - GRAPHICS\10 CADD\CADBRD\HDW\PROFILE.DWG | PROFILE - 1 | 8/29/2013 7:41 AM BY: DENIS.BURNHUER

CHATHAM
BRIDGE STREET

| STATE | FED. AID PROJ. NO. | SHEET NO. | TOTAL SHEETS |
|---|---|---|---|
| MASS. | NHP-002S(539) | 19 | 214 |
| PROJECT FILE NO. 603690 | | | |

# PROFILE – BRIDGE STREET
SHEET 2 OF 2

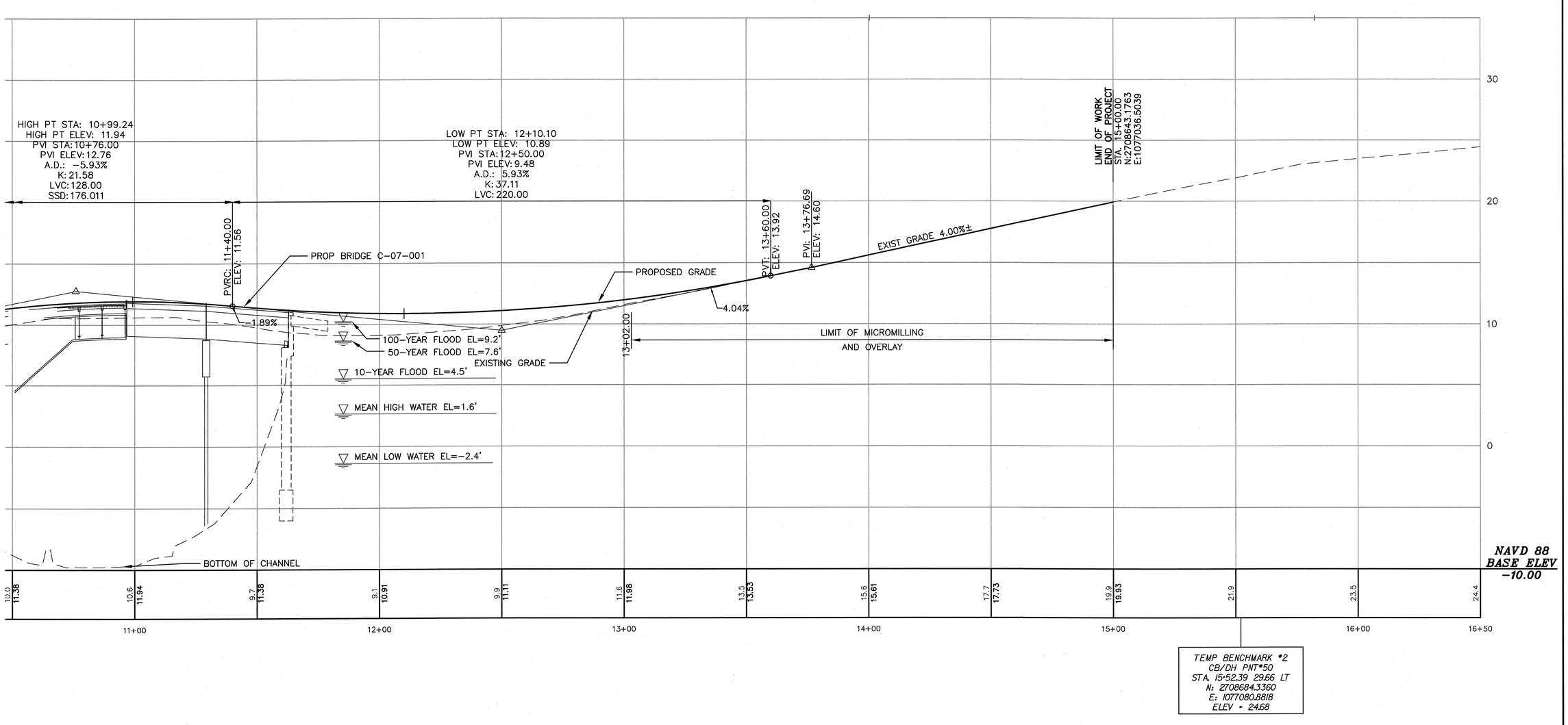


FOR CONTINUATION SEE PLAN SHEET 18

FOR CONSTRUCTION PLAN SEE SHEET 17

PLOTTED: 10/23/2013 9:27 AM BY: ALEXANDER.CURRIMJEE
DRAWING: P:\KBS-GEN\MASSHIGHWAY\2009 SERIES\M SA\SESSION #1 - CHATHAM BRIDGE\500 CADD - DGS - GRAPHICS\510 CADD\603690\HDV\DWG\PROFILE.DWG [PROFILE - 2] 8/29/2013 7:41 AM BY: DENNIS.BURNHEIMER

CHATHAM
BRIDGE STREET

| STATE | FED. AID PROJ. NO. | SHEET NO. | TOTAL SHEETS |
|---|---|---|---|
| MASS. | NHP-002S(539) | 20 | 214 |
| PROJECT FILE NO. 603690 | | | |

GRADING AND TIE PLAN
SHEET 1 OF 2

## BRIDGE STREET CONSTRUCTION BASELINE DATA

| DESCRIPTION | TANGENT/CURVE DATA | NORTHING | EASTING |
|---|---|---|---|
| START STA 6+00.00 | L=124.35' N73°57'49"E | 2708378.0974 | 1076176.5189 |
| PC STA 7+24.347 | CURVE 1 L=235.667' R=7740.000' Δ=1°44'40" T=117.843' | 2708412.4485 | 1076296.0285 |
| PT STA 9+60.01 | L=440.413' N72°13'08"E | 2708480.9890 | 1076521.4990 |
| PC STA 14+00.43 | CURVE 2 L=363.765' R=1750.000' Δ=11°54'35" T=182.540' | 2708615.4820 | 1076940.8740 |
| PT STA 17+64.192 | L=35.808' N84°07'44"E | 2708689.8983 | 1077296.2768 |
| END STA 18+00.00 | | 2708693.5612 | 1077331.8971 |

## CURVE DATA

| NUMBER | RADIUS | LENGTH | TANGENT | DELTA |
|---|---|---|---|---|
| 3 | 6.00' | 9.43' | 6.00' | 90°2'22" |
| 4 | 6.00' | 7.11' | 4.04' | 67°51'56" |

## 1890 COUNTY BASELINE DATA

| DESCRIPTION | TANGENT/CURVE DATA | NORTHING | EASTING |
|---|---|---|---|
| START STA 0+00.00 | L=1336.27' N73°57'49"E | 2708189.0488 | 1075502.5173 |
| PI STA 13+36.27 | L=229.86' N64°03'14"E | 2708558.1915 | 1076786.7880 |
| PI STA 15+66.13 | L=705.83' N84°07'44"E | 2708658.7613 | 1076993.4794 |
| PI STA 22+71.96 | L=128.04' N84°02'54"E | 2708730.9619 | 1077695.6069 |
| END STA 24+00.00 | | 2708744.2384 | 1077822.9567 |

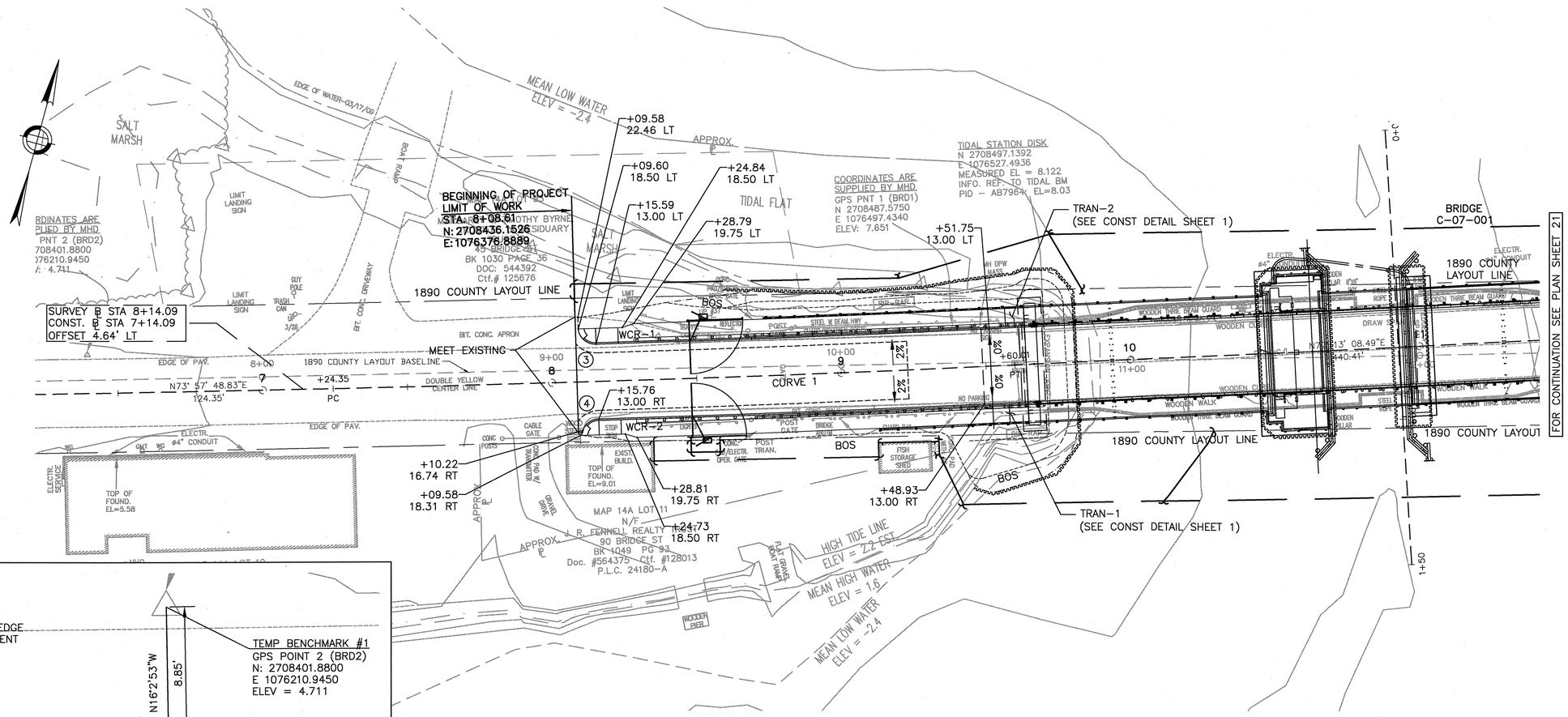


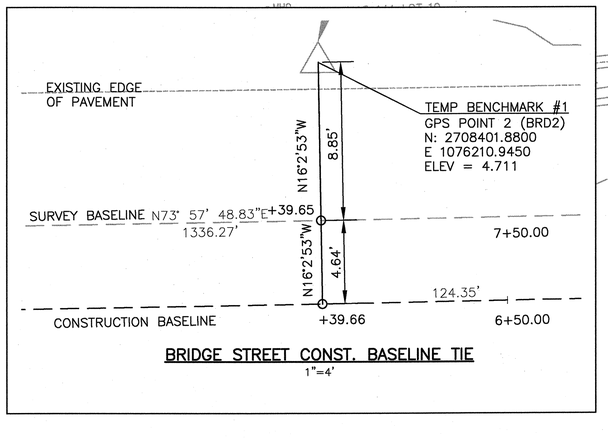


BRIDGE STREET CONST. BASELINE TIE
1"=4'

## LEGEND

| | |
|---|---|
| WCR-X | WHEEL CHAIR RAMP |
| TRAN-X | SIDEWALK TRANSITION AT THE BRIDGE |
| (X) | CURVE |

20 0 20 40
SCALE 1" = 20'

PLOTTED: 10/23/2013 9:27 AM BY: ALEXANDER.CURRIMJEE
DRAWING: P:\CORE-BR\MASSDOT\WA\2002 SERIES\CM\ASSIGN #1 - CHATHAM BRIDGE\400 CADD - GIS - GRAPHICS\10 CADD\03389DW1WC\GRADING AND DRAINAGE PWS (GRADING AND TIE PLAN - 11/10/2013 8:30 AM BY: HARDER.HAMANO)

CHATHAM
BRIDGE STREET

| STATE | FED. AID PROJ. NO. | SHEET NO. | TOTAL SHEETS |
|---|---|---|---|
| MASS. | NHP-002S(539) | 21 | 214 |
| PROJECT FILE NO. 603690 | | | |

# GRADING AND TIE PLAN
## SHEET 2 OF 2

## BOUND LOCATION

| STATION | OFFSET | NORTH | EAST |
|---|---|---|---|
| 12+42.08 | 32.29' LT | 2708597.8767 | 1076780.2258 |
| 12+37.70 | 32.17' RT | 2708535.1576 | 1076795.7428 |

## CURVE DATA

| NUMBER | RADIUS | LENGTH | TANGENT | DELTA |
|---|---|---|---|---|
| (5) | 6.00' | 9.43' | 6.00' | 90°00'00" |

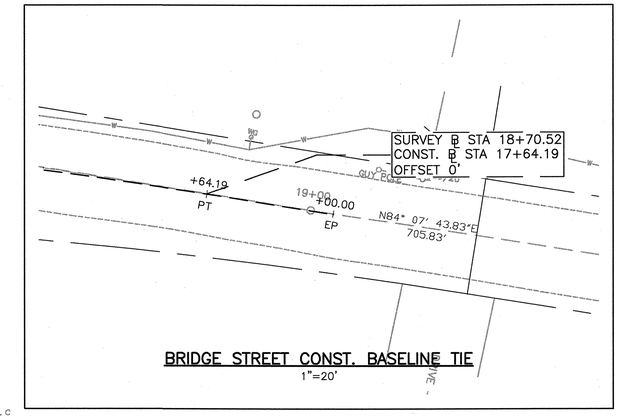


BRIDGE STREET CONST. BASELINE TIE
1"=20'

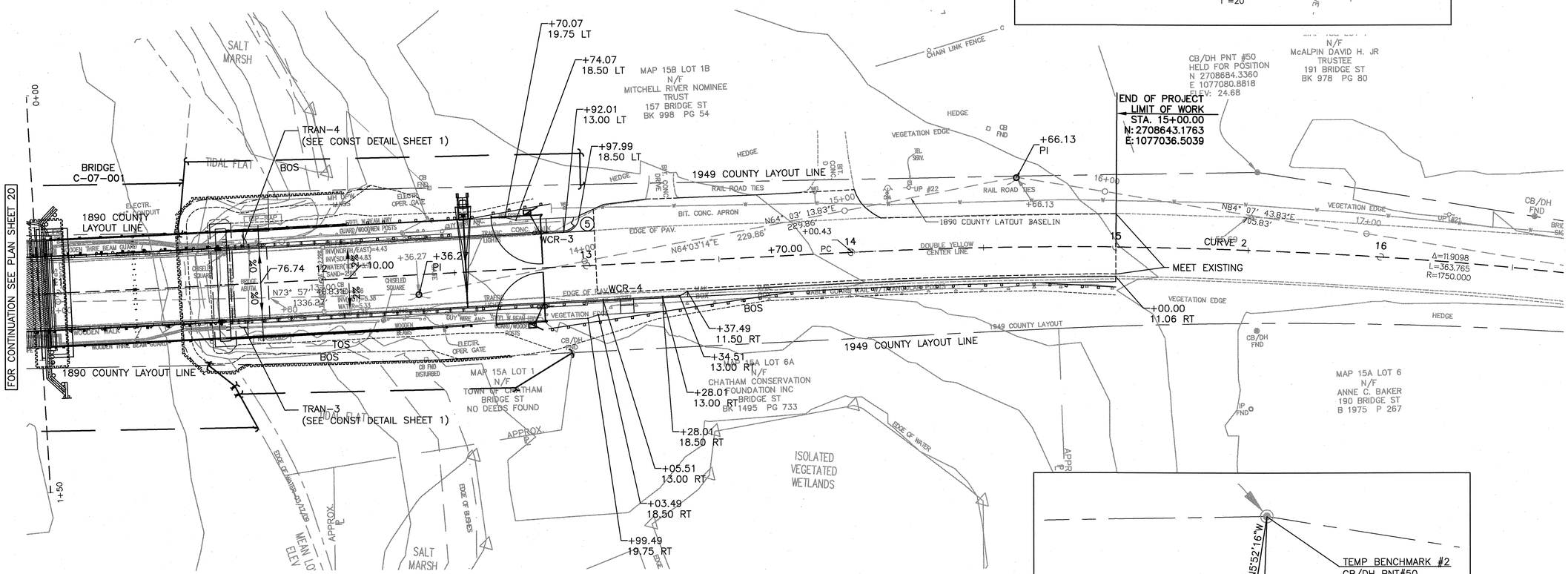


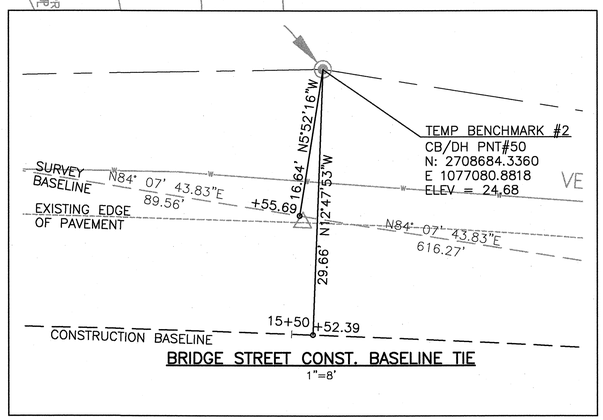


BRIDGE STREET CONST. BASELINE TIE
1"=8'

## LEGEND

| | |
|---|---|
| WCR-X | WHEEL CHAIR RAMP |
| TRAN-X | SIDEWALK TRANSITION AT THE BRIDGE |
| (X) | CURVE |

20 0 20 40
SCALE 1" = 20'

PLOTTED: 10/23/2013 9:28 AM BY: ALEXANDER.CURRIMJEE
DRAWING: P:\CORE-SER\MASSHIGHWAY\2002 SERIES\M_A\S539_B - CHATHAM BRIDGE\900 CADD - CRS - GRAPHICS\510 CADD\GRADING\DRAWINGS\GRADING AND DRAINAGE DWG (GRADING AND TIE PLAN - 21)\GRADING AND TIE PLAN - 21.10/22/2013 8:30 AM BY: HARPER.HANNAH

CHATHAM
BRIDGE STREET

| STATE | FED. AID PROJ. NO. | SHEET NO. | TOTAL SHEETS |
|---|---|---|---|
| MASS. | NHP-002S(539) | 22 | 214 |
| PROJECT FILE NO. 603690 | | | |

# TEMPORARY TRAFFIC CONTROL PLAN

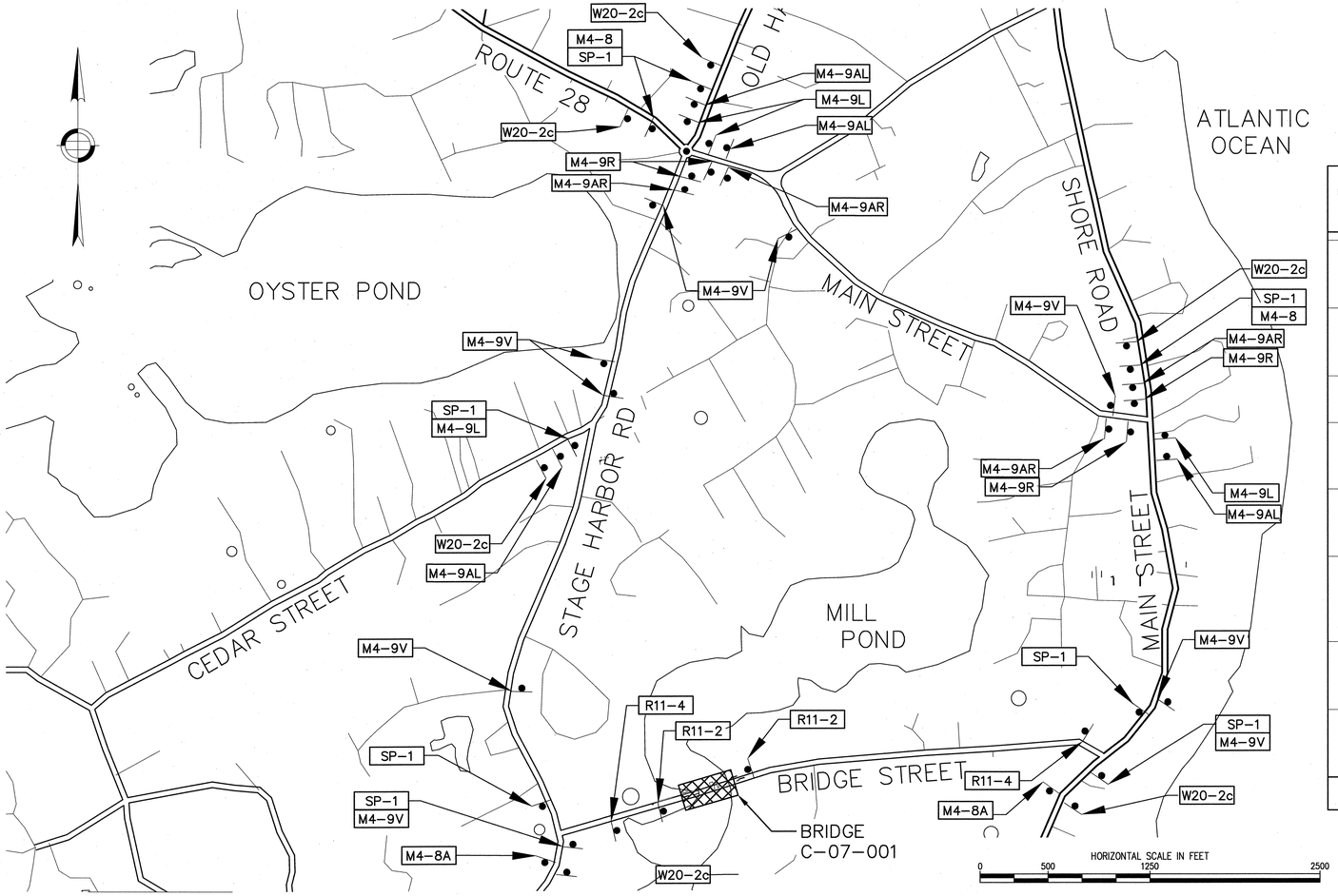


## CONSTRUCTION SIGN SUMMARY – TRAFFIC DETOUR

| IDENTIFICATION NUMBER | SIZE OF SIGN WIDTH (in) | SIZE OF SIGN HEIGHT (in) | TEXT | TEXT DIMENSIONS (in) LETTER HEIGHT | TEXT DIMENSIONS (in) VERTICAL SPACING | TEXT DIMENSIONS (in) ARROW RTE. MKR. | NUMBER OF SIGNS REQUIRED | COLOR BACK-GROUND | COLOR LEGEND | COLOR BORDER | AREA PER SIGN IN SQUARE FEET | TOTAL AREA IN SQUARE FEET |
|---|---|---|---|---|---|---|---|---|---|---|---|---|
| M4-9(V/L/R) | 30 | 24 | DETOUR ➡ | SEE M.U.T.C.D. | | | 9-(M4-9V)<br>4-(M4-9L)<br>4-(M4-9R) | SEE M.U.T.C.D. | | | 5.0 | 85 |
| M4-9(AL/AR) | 30 | 24 | DETOUR ← | | | | 4-(M4-9L)<br>4-(M4-9R) | | | | 5.0 | 40 |
| M4-8A | 24 | 18 | END DETOUR | | | | 2 | | | | 3.0 | 6 |
| R11-4 | 60 | 30 | ROAD CLOSED TO THRU TRAFFIC | | | | 2 | | | | 12.5 | 25 |
| R11-2 | 48 | 30 | BRIDGE CLOSED | | | | 2 | | | | 10.0 | 20 |
| M4-8 | 24 | 12 | DETOUR | | | | 3 | | | | 2.0 | 6 |
| W20-2c | 36 | 36 | DETOUR AHEAD | | | | 6 | | | | 9.0 | 54 |
| SP-1 | 60 | 24 | BRIDGE STREET<br>BRIDGE CLOSED | 6<br>6 | 6<br>4<br>6 | | 8 | ORANGE | BLACK | BLACK | 10.0 | 80 |
| TOTAL AREA OF SIGNS (SQUARE FEET) | | | | | | | | | | | | 316 |

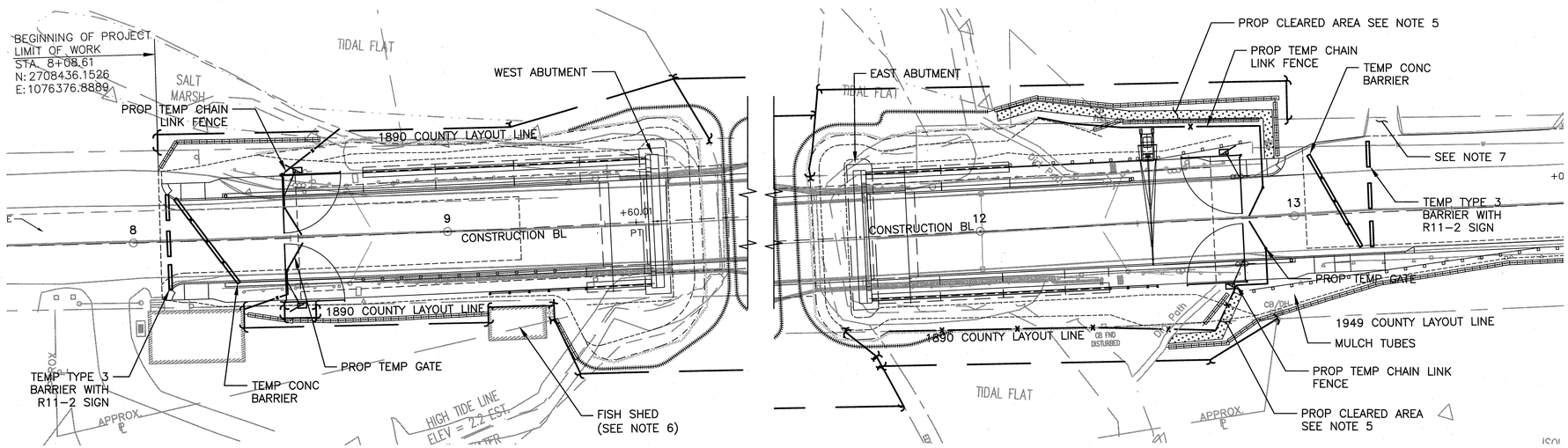


## BRIDGE CLOSURE PLAN
1"=20'

## TRAFFIC MANAGEMENT NOTES:

1. DETOUR PLAN MUST BE APPROVED IN WRITING IN ADVANCE BY THE TOWN OF CHATHAM
2. THE CONTRACTOR SHALL NOTIFY ABUTTERS OF BRIDGE AT LEAST 48 HOURS IN ADVANCE OF THE START OF ANY WORK THAT WILL REQUIRE THE TEMPORARY CLOSURE OF ACCESS.
3. ALL SIGNS SHALL CONFORM TO THE CURRENT EDITION OF THE MANUAL ON UNIFORM TRAFFIC CONTROL DEVICES, THE F.H.W.A. STANDARD HIGHWAY SIGNS AND DETAILS AND MASSHIGHWAY 1990 STANDARD DRAWINGS FOR SIGNS AND SUPPORTS, THE METRIC/ENGLISH SUPPLEMENTAL DRAWINGS AND PLANS.
4. TYPE AND METHOD OF MOUNTING SHOWN MAY VARY DUE TO ACTUAL PLACEMENT, PLACEMENT LOCATIONS AND FIELD CONDITIONS, AND AS DIRECTED BY THE ENGINEER.
5. THE CLEAR AREA MUST BE MAINTAINED THROUGHOUT CONSTRUCTION.
6. ACCESS TO THE FISH SHED SHALL BE MAINTAINED DURING CONSTRUCTION. CONTRACTOR SHALL COORDINATE ACCESS WITH THE PROPERTY OWNER AS NECESSARY.
7. DRIVEWAY ACCESS SHALL BE MAINTAINED AT ALL TIMES.

PLOTTED: 10/23/2013 9:28 AM BY: ALEXANDER_CURRIMJEE
DRAWING: P:\08S-GR\MASSHIGHWAY\2002 SERIES\A\SASSIN #1 - CHATHAM BRIDGE\500 CARD - GS - GRAPHICS\510 CARD\603690\TRAV\DETOUR PLAN\DETOUR PLAN1 9/4/2013 8:25 AM BY: HARDER-HAMANN

CHATHAM
BRIDGE STREET

| STATE | FED. AID PROJ. NO. | SHEET NO. | TOTAL SHEETS |
|---|---|---|---|
| MASS. | NHP-002S(539) | 23 | 214 |
| PROJECT FILE NO. 603690 | | | |

TEMPORARY TRAFFIC
DETAILS SHEETS 1 OF 1

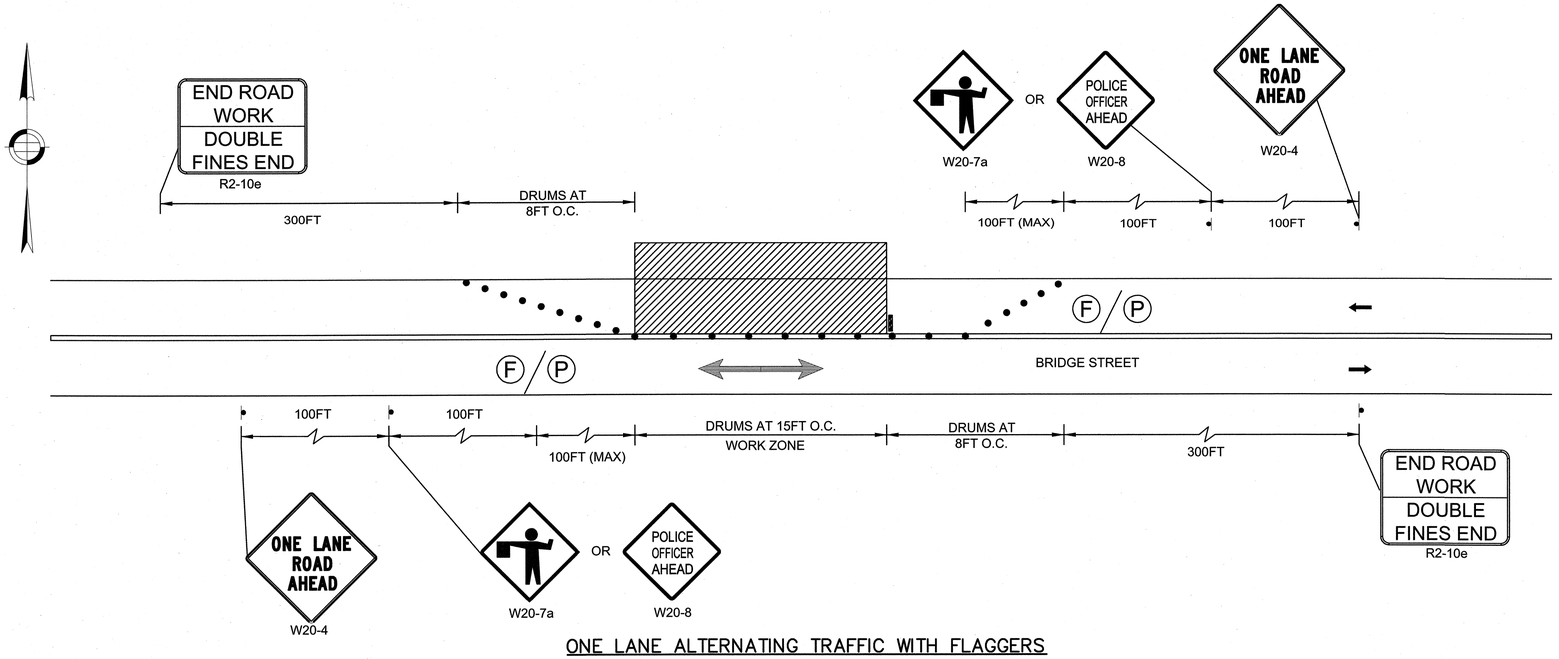


ONE LANE ALTERNATING TRAFFIC WITH FLAGGERS
NTS

## CONSTRUCTION SIGN SUMMARY – LANE CLOSURE

| IDENTIFICATION NUMBER | SIZE OF SIGN | | TEXT | TEXT DIMENSIONS (in) | | | NUMBER OF SIGNS REQUIRED | COLOR | | | AREA PER SIGN IN SQUARE FEET | TOTAL AREA IN SQUARE FEET |
|---|---|---|---|---|---|---|---|---|---|---|---|---|
| | WIDTH (in) | HEIGHT (in) | | LETTER HEIGHT | VERTICAL SPACING | ARROW RTE. MKR. | | BACK-GROUND | LEGEND | BORDER | | |
| W20-7a | 30 | 30 | | SEE M.U.T.C.D. | | | 2 | SEE M.U.T.C.D. | | | 6.3 | 12.5 |
| W20-8 | 30 | 30 | POLICE OFFICER AHEAD | ↓ | ↓ | ↓ | 2 | ↓ | ↓ | ↓ | 6.3 | 12.5 |
| R2-10e | 24 | 18 | END ROAD WORK / DOUBLE FINES END | ↓ | ↓ | ↓ | 2 | ↓ | ↓ | ↓ | 3.0 | 6 |
| W20-4 | 36 | 36 | ONE LANE ROAD AHEAD | ↓ | ↓ | ↓ | 2 | ↓ | ↓ | ↓ | 9 | 18 |
| TOTAL AREA OF SIGNS (SQUARE FEET) | | | | | | | | | | | | 49 |

PLOTTED: 10/23/2013 8:28 AM BY: ALEXANDER.CURRIMJEE
DRAWING: P:\KPS-SRV\MASSDOT\MASSDOT\ACTIVE\NHP-002S-539\CHATHAM BRIDGE\600-CADD - GRS - GRAPHICS\010-CADD\GS39A1TR\DWG\VICTOR_PLAN.DWG [TTCP-DETAILS - 11 8/5/2013 8:25 AM BY: HUNTER.HAMANO]

CHATHAM
BRIDGE STREET

| STATE | FED. AID PROJ. NO. | SHEET NO. | TOTAL SHEETS |
|---|---|---|---|
| MASS. | NHP-002S(539) | 24 | 214 |
| PROJECT FILE NO. 603690 | | | |

# SIGN, SIGNAL & PVMT MARKING PLANS SHEET 1 OF 2

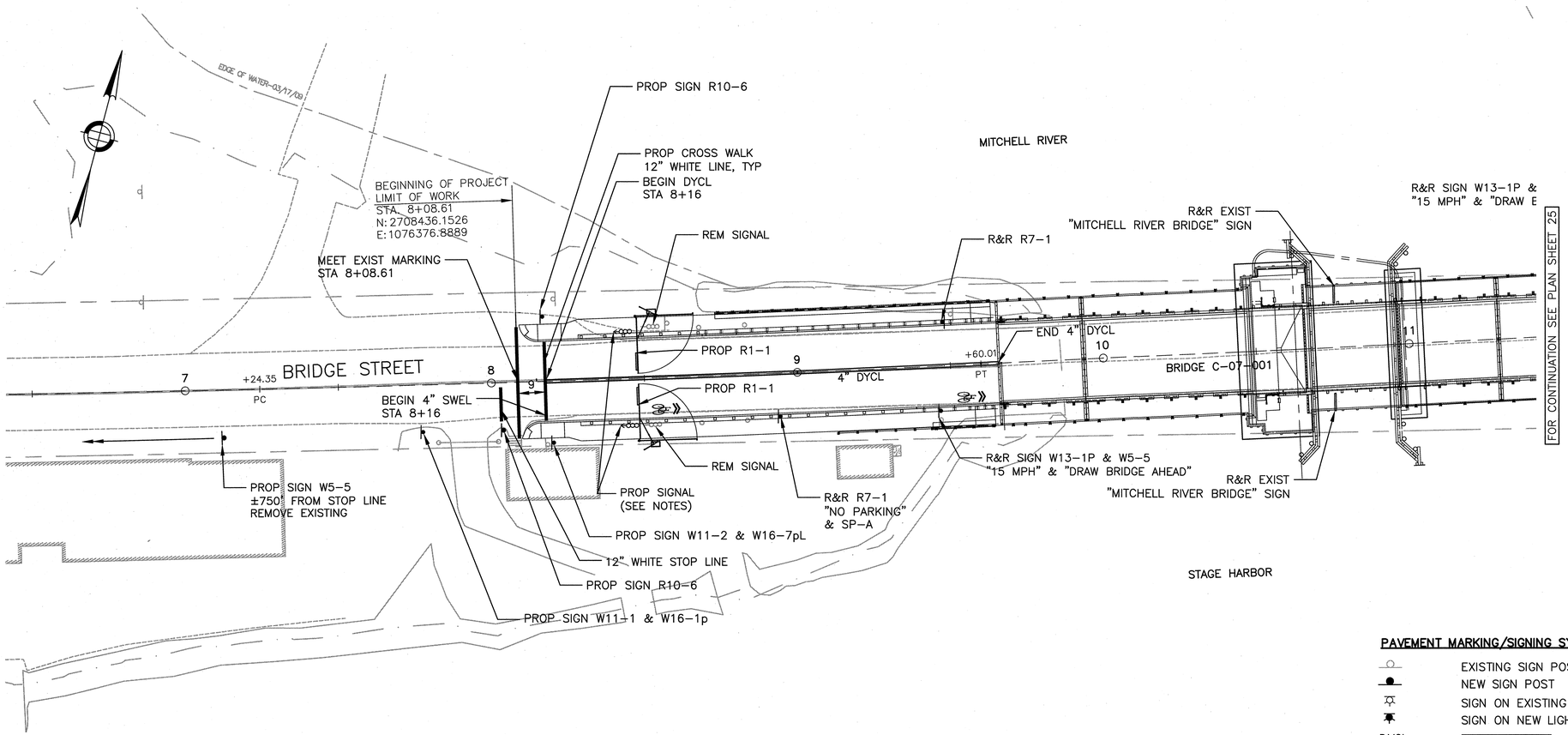


**PAVEMENT MARKING/SIGNING SYMBOLS AND ABBREVIATIONS**

| | |
|---|---|
| | EXISTING SIGN POST |
| | NEW SIGN POST |
| | SIGN ON EXISTING LIGHT POLE |
| | SIGN ON NEW LIGHT POLE |
| DYCL | 4" DOUBLE YELLOW CENTER LINE |
| SL | 12" SOLID WHITE STOP LINE |
| | SHARED LANE MARKING |

NOTES:

1) SEE SIGN, SIGNAL & PAVEMENT MARKINGS SHEET 2 OF 2 FOR SIGN SUMMARY

2) PAVEMENT MARKINGS SHALL BE THERMOPLASTIC

3) STANDARD POST TOP MOUNTED 8" ONE WAY THREE SECTION TRAFFIC SIGNAL WITH STANDARD TRAFFIC SIGNAL POST & BASE

20 0 20 40

SCALE 1" = 20'

PLOTTED: 10/23/2013 9:28 AM BY: ALEXANDER.CURRIMJEE
DRAWING: P:\K08-SER\MASSHIGHWAY\2009 SERIES\S\ASSIGN #1 - CHATHAM BRIDGE\500 CADD - GS - GRAPHICS\10 CADD\60360\TR\DWG\PAVEMENT MARKINGS.DWG [PAVEMENT MARKINGS - 1] 10/22/2013 1:13 PM BY: HAUGER.HAMANDI

CHATHAM
BRIDGE STREET

| STATE | FED. AID PROJ. NO. | SHEET NO. | TOTAL SHEETS |
|---|---|---|---|
| MASS. | NHP-002S(539) | 25 | 214 |
| PROJECT FILE NO. 603690 | | | |

# SIGN, SIGNAL & PVMT MARKING PLANS SHEET 2 OF 2

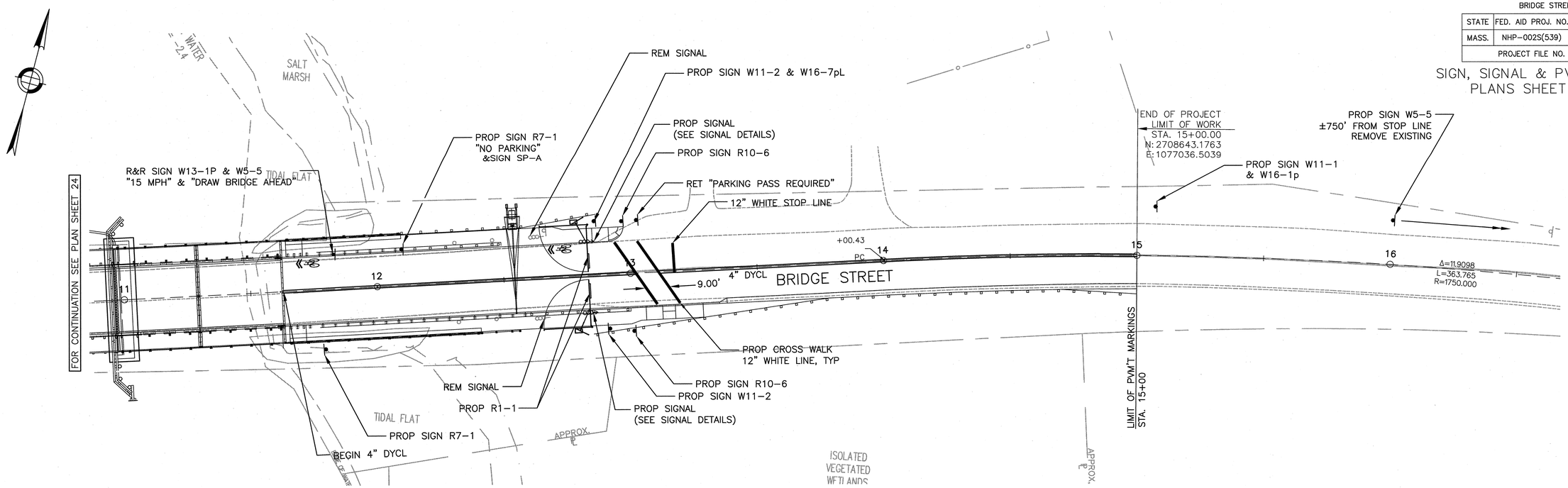


## PAVEMENT MARKING/SIGNING SYMBOLS AND ABBREVIATIONS

- EXISTING SIGN POST
- NEW SIGN POST
- SIGN ON EXISTING LIGHT POLE
- SIGN ON NEW LIGHT POLE
- NEW SIGNAL
- EXISTING SIGNAL

| | | |
|---|---|---|
| DYCL | | 4" DOUBLE YELLOW CENTER LINE |
| SL | | 12" SOLID WHITE STOP LINE |
| | | SHARED LANE MARKING |

NOTES:

1) ALL PAVEMENT MARKINGS SHALL BE THERMOPLASTIC.

2) USE THE CURRENT EDITION OF THE MUTCD, 1979 STD. HWY SIGNS AND SECTION M9.30.0 TYPE III OF THE MASSDOT STANDARD SPECIFICATIONS FOR TEXT DIMENSIONS AND COLOR.

3) SEE MASSDOT STANDARD DRAWINGS FOR SIGNS AND SUPPORTS, 1990.

20 0 20 40

SCALE 1" = 20'

PLOTTED: 10/23/2013 9:28 AM BY: ALEXANDER_CURRIMJEE
DRAWING: P:\KBS_GED\MASSHIGHWAY\2009 SERIES\H_S\ASSGN_#1 - CHATHAM BRIDGE\300 CADD - GIS - GRAPHICS\310 CADD\E603690\TR\DWG\PAVEMENT MARKINGS.DWG [PAVEMENT MARKINGS - 2] 10/22/2013 1:13 PM BY: HAGER, HANNAH

CHATHAM
BRIDGE STREET

| STATE | FED. AID PROJ. NO. | SHEET NO. | TOTAL SHEETS |
|---|---|---|---|
| MASS. | NHP-002S(539) | 26 | 214 |
| PROJECT FILE NO. 603690 | | | |

SIGN SUMMARY SHEET

# SIGN SUMMARY

| IDENTIFI-CATION NUMBER | SIZE OF SIGN | | TEXT | TEXT DIMENSIONS (INCHES) | | | NUMBER OF SIGNS REQUIRED | COLOR | | | POST SIZE AND NUMBER REQUIRED | UNIT AREA (S.F.) | AREA IN SQUARE FEET |
|---|---|---|---|---|---|---|---|---|---|---|---|---|---|
| | WIDTH | HEIGHT | | LETTER HEIGHT | VERTICAL SPACING | ARROW RTE. MKR. | | BACK-GROUND | LEGEND | BORDER | | | |
| R1-1 | 24" x 24" OCTAGON | | STOP | SEE M.U.T.C.D. | | | 4 | SEE M.U.T.C.D. | | | MOUNTED ON GATE | 4.0 | 16 |
| R10-6 | 24" | 36" | STOP MODE ON RED | | | | 4 | | | | P-5 4 REQ'D | 6 | 24 |
| R7-1 | 12" | 18" | NO PARKING ANY TIME | | | | 2 | | | | P-5 2 REQ'D | 1.5 | 3 |
| SP-A | 12" | 18" | WARNING PLOW DRIVERS LIFT BLADE | | | | 2 | | | | WITH R7-1 P-5 2 REQ'D | 1.5 | 3 |
| W11-2 | 30" | 30" | | | | | 2 | | | | P-5 2 REQ'D | 6.25 | 12.50 |
| W16-7pL | 24" | 12" | W16-7pL | | | | 2 | | | | WITH W11-2 | 2.00 | 4.00 |
| W5-5 | 36" | 36" | DRAW BRIDGE AHEAD | | | | 2 | | | | P-5 2 REQ'D | 9.00 | 18 |
| W11-1 | 30" | 30" | | | | | 2 | | | | P-5 2 REQ'D | 6.25 | 12.5 |
| W16-1p | 18" | 24" | SHARE THE ROAD | | | | 2 | | | | WITH W11-1 | 3.00 | 6 |
| TOTAL AREA OF SIGNS (SQUARE FEET) | | | | | | | | | | | | | 99.00 |

PLOTTED: 10/23/2013 9:28 AM BY: ALEXANDER_CURRIMJEE
FILENAME: P:\CRS-SP\MASSHWA\NHP002S-SR539\A\SIGN FILE - CHATHAM BRIDGE\SIG_CARD - SIS - GRADING\SIG\TRAFFIC\PAVEMENT MARKING\PMS\SIGN SUMMARY1.10/22/2013 1:13 PM BY: HARDER, HANNAH

| STATE | FED. AID PROJ. NO. | SHEET NO. | TOTAL SHEETS |
|---|---|---|---|
| MASS. | NHP-002S(539) | 27 | 214 |
| PROJECT FILE NO. 603690 | | | |

CHATHAM
BRIDGE STREET

# SIGNAL DETAILS
SHEET 1 OF 1

| QUANTITY | DESCRIPTION |
|---|---|
| 4 | POST TOP MOUNTED ONE WAY THREE SECTION SIGNAL HEAD W/ 8" SIGNAL |
| 4 | PULL BOXES 10" X 10" |

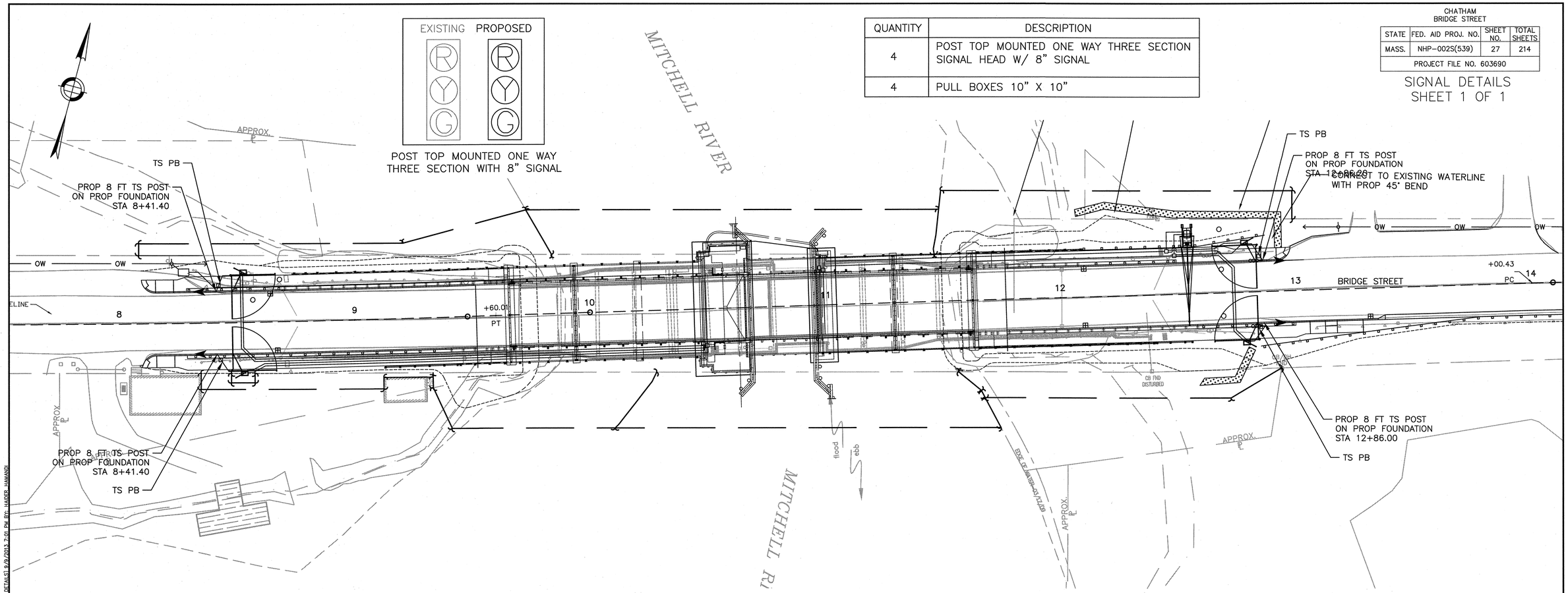


NOTES:

1) ALL PROPOSED CONDUIT INFORMATION IS SHOWN ON THE UTILITY PLANS
2) THE CONDUIT AND CABLE SCHEDULE ON SHEET 173 OF THE BRIDGE PLANS PROVIDES THE CONDUIT SIZE FOR ALL THE CONDUIT FOR THE PROJECT INCLUDING THE TRAFFIC SIGNAL.
3) ALL ELECTRICAL AND SIGNAL CONTROL INFORMATION IS SHOWN IN THE ELECTRICAL PLANS SECTION OF THE BRIDGE PLANS SHEETS 149 THROUGH 173
4) FOR BRIDGE OPERATIONS AND COORDINATION WITH THE TRAFFIC SIGNAL SEE BRIDGE OPERATING SEQUENCE DIAGRAM ON BRIDGE PLANS SHEET 150 OF 173
5) A BYPASS SWITCH SHALL BE INSTALLED TO OVERRIDE EACH TIMING INTERVAL IN CASE OF A MALFUNCTION.
6) BEGINNING OF OPERATION OF DRAWBRIDGE GATES SHALL NOT BE LESS 20 SECONDS AFTER FLASHING RED (ACTUAL TIME MAY BE DETERMINED BY THE BRIDGE TENDER.)
7) TIME OF BRIDGE OPENING IS DETERMINED BY THE BRIDGE TENDER.
8) EACH GATE SHALL BE OPERATED BY A SEPARATE SWITCH.
9) ON EACH APPROACH, ALL FOUR RED SIGNALS SHALL BE ON THE SAME TWO CIRCUIT FLASHERS, WITH THE TWO TOP SIGNALS ON ONE CIRCUIT, AND THE TWO BOTTOM SIGNALS ON THE ALTERNATELY FLASHING CIRCUIT.

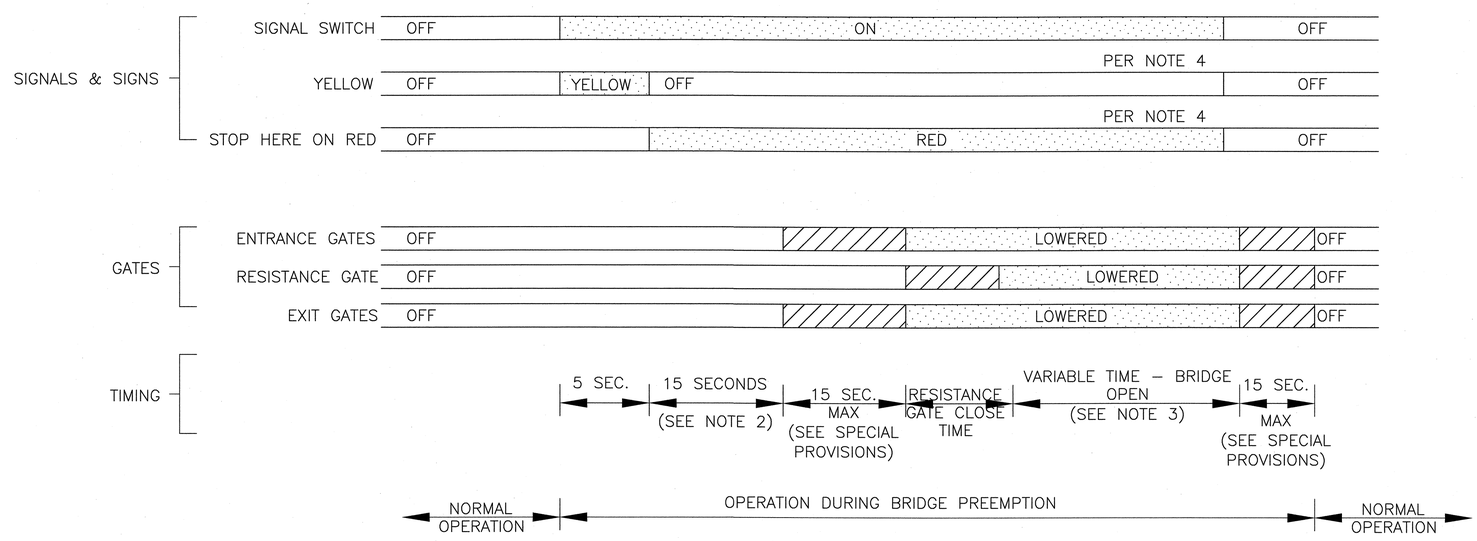


PLOTTED: 10/23/2013 9:29 AM BY: ALEXANDER, DURRWAEE
DRAWING: P:\DBI-SPN\MASSHIGHWAY\2009 SHRINK\SHRINK\ #1 - CHATHAM BRIDGE\S02 C4D\ - 09 - GRAPHICS\S10 C4D\1603690\TRUNK\SIGNAL DETAILS.DWG SIGNAL DETAILS 9/9/2013 7:01 PM BY: HARDER, HANANIO

CHATHAM
BRIDGE STREET

| STATE | FED. AID PROJ. NO. | SHEET NO. | TOTAL SHEETS |
|---|---|---|---|
| MASS. | NHP-002S(539) | 28 | 214 |
| PROJECT FILE NO. 603690 | | | |

# UTILITY PLAN
SHEET 1 OF 2

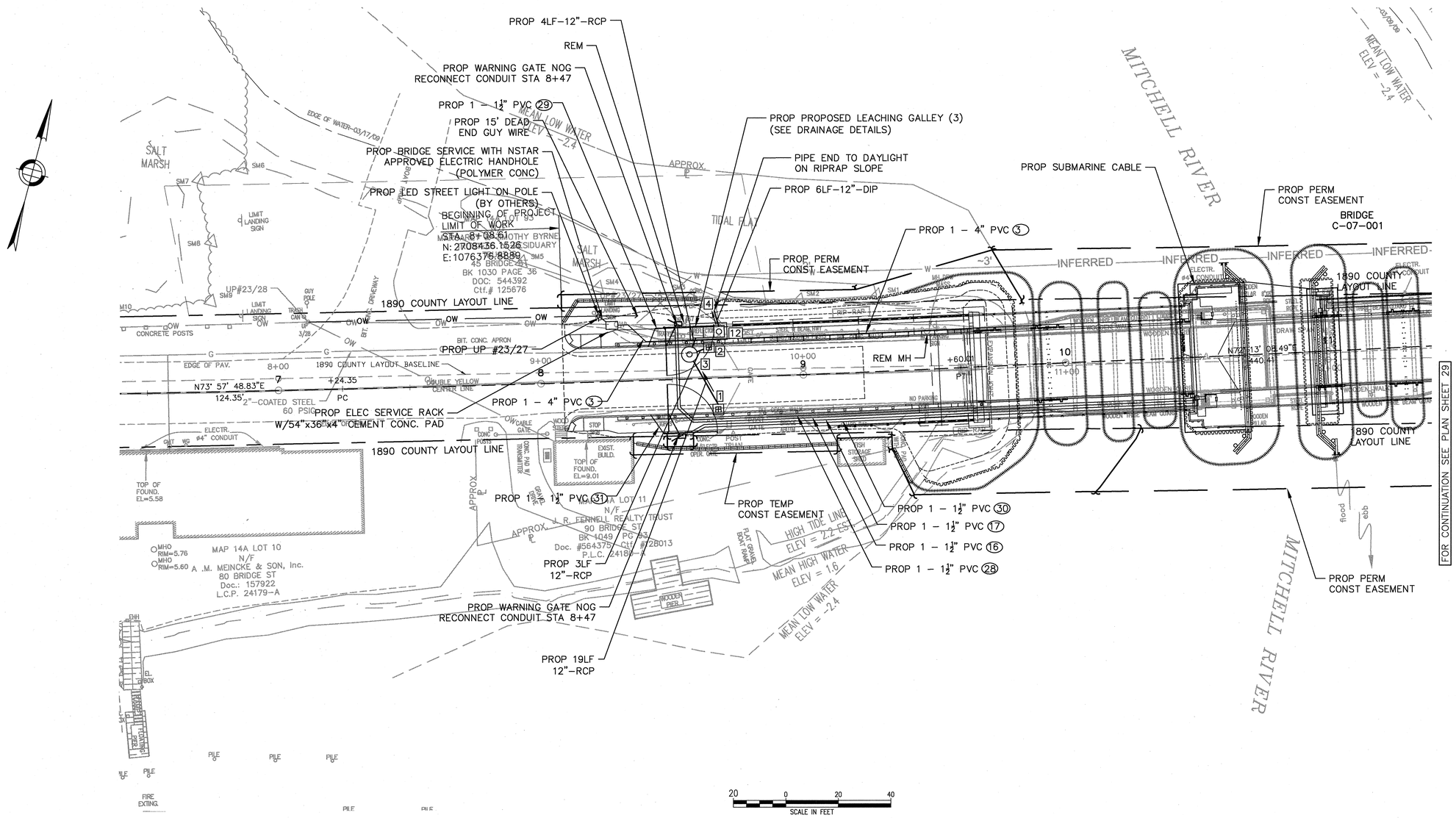


NOTES:

1) ADDITIONAL SPECIFIC ROUTING AND ELECTRICAL DETAILS ARE SHOWN IN ELECTRICAL COMPONENT OF THE BRIDGE PLANS
2) THE SYMBOL (XX) REFERS TO THE ITEM NUMBER ON THE CONDUIT AND CABLE SCHEDULE
3) CONTRACTOR TO VERIFY LOCATION OF EXISTING WATERMAIN PRIOR TO ANY BRIDGE WORK.

DRAINAGE STRUCTURE DATA

| STRUCTURE NO. | TYPE | STATION | OFFSET (FT) | RIM ELEV (FT) | INV. IN (FT) | INV. OUT (FT) | BOTTOM ELEV (FT) |
|---|---|---|---|---|---|---|---|
| 1 | CBCI | 8+67.13 | 12.0 RT | 6.68 | – | 3.23 | –0.77 |
| 2 | CBCI | 8+64.38 | 12.0 LT | 6.60 | – | 2.95 | –1.05 |
| 3 | DMH | 8+56.92 | 9.48 LT | 6.60 | 2.94 | 2.94 | – |
| 4 | PIPE END | 8+66.92 | 25.93 LT | – | – | 4.00 | – |
| 12 | LG | 8+68.43 | 17.88 LT | 7.21 | 2.93 | 4.02 | 2.26 |

FOR PROFILE SEE SHEET 18

PLOTTED: 10/23/2013 9:29 AM BY: ALEXANDER.CURRIMJEE
DRAWING: P:\DOES-DPW\MASSHIGHWAY\002 SERIES\H &A\SESSION # – CHATHAM BRIDGE\500 CADD – DGS – GRAPHICS\A10 CADD\G36890\A1\PRELIMINARY CONSTRUCTION PLAN\PWE UTILITY PLAN – 11\10/22/2013 8:17 AM BY: HARDER, HOWARD

CHATHAM
BRIDGE STREET

| STATE | FED. AID PROJ. NO. | SHEET NO. | TOTAL SHEETS |
|---|---|---|---|
| MASS. | NHP-002S(539) | 29 | 214 |
| PROJECT FILE NO. 603690 | | | |

# UTILITY PLAN
## SHEET 2 OF 2

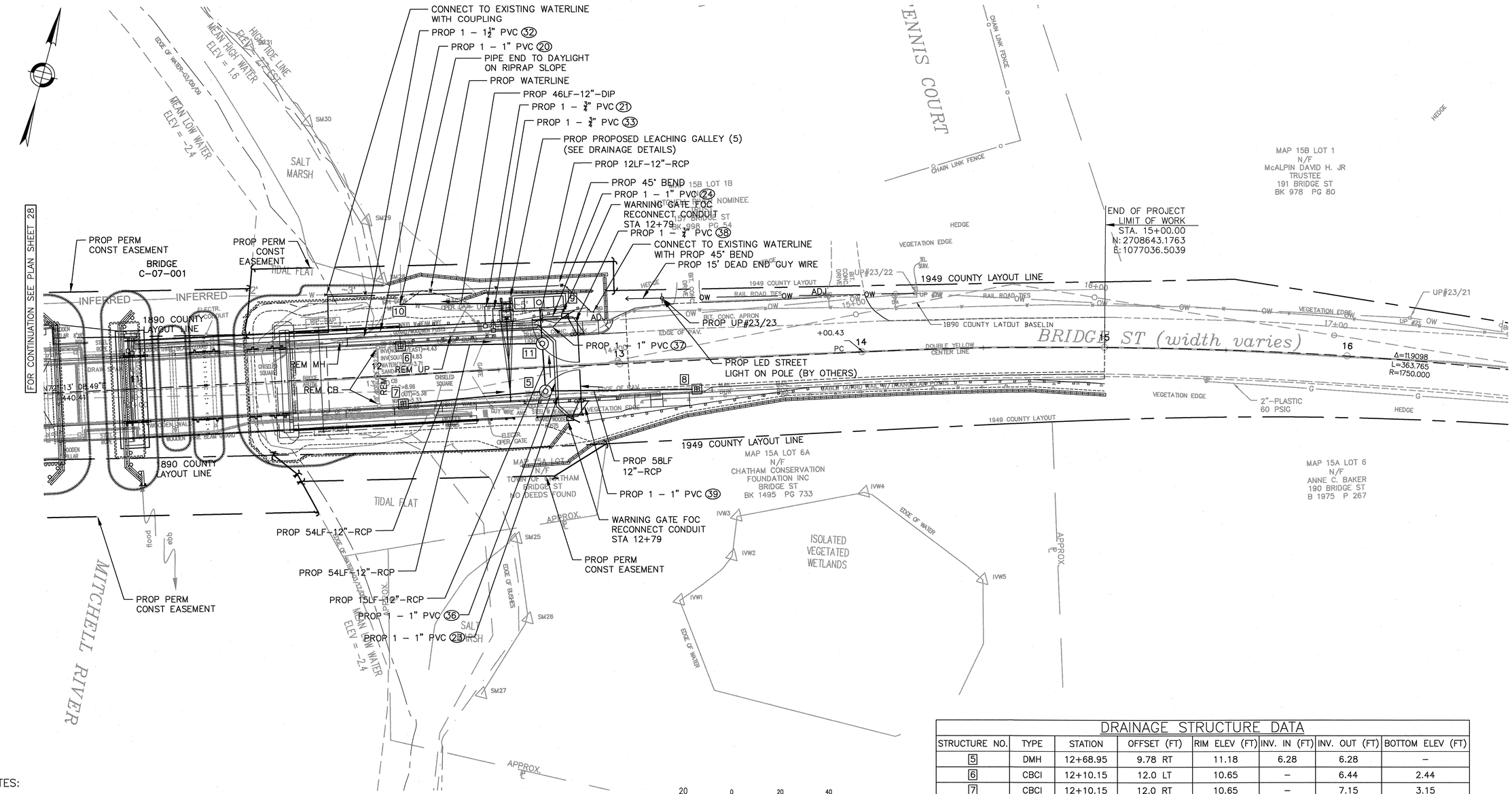


NOTES:

1) ADDITIONAL SPECIFIC ROUTING AND ELECTRICAL DETAILS ARE SHOWN IN ELECTRICAL COMPONENT OF THE BRIDGE PLANS
2) THE SYMBOL (XX) REFERS TO THE ITEM NUMBER ON THE CONDUIT AND CABLE SCHEDULE
3) REMOVAL OF THE EXISTING DRAINAGE FACILITIES SHALL INCLUDE THE CB & MH SHOWN IN THE PLANS AS WELL AS ALL EXISTING PIPES CONNECTING THE STRUCTURES AND THE OUTFALL PIPE

DRAINAGE STRUCTURE DATA

| STRUCTURE NO. | TYPE | STATION | OFFSET (FT) | RIM ELEV (FT) | INV. IN (FT) | INV. OUT (FT) | BOTTOM ELEV (FT) |
|---|---|---|---|---|---|---|---|
| 5 | DMH | 12+68.95 | 9.78 RT | 11.18 | 6.28 | 6.28 | – |
| 6 | CBCI | 12+10.15 | 12.0 LT | 10.65 | – | 6.44 | 2.44 |
| 7 | CBCI | 12+10.15 | 12.0 RT | 10.65 | – | 7.15 | 3.15 |
| 8 | CBCI | 13+31.25 | 11.0 RT | 12.98 | – | 6.57 | 2.42 |
| 9 | LG | 12+68.05 | 27.16 LT | 12.77 | 6.17 | 7.34 | 5.50 |
| 10 | PIPE END | 12+10.75 | 29.38 LT | 3.97 | – | 4.00 | – |
| 11 | DMH | 12+68.54 | 10.0 LT | 11.17 | 6.22 | 6.22 | – |

FOR PROFILE SEE SHEET 19

PLOTTED: 10/23/2013 9:29 AM BY: ALEXANDER.CURRIMJEE
DRAWING: P:\CRS-SR\MASSHIGHWAY\002 SERIES\MASSDOT - CHATHAM BRIDGE\500-549\ - CRS - GRAPHICS\10 CADD\CRS\UTILITY\UTILITY CONSTRUCTION PLAN.DWG [UTILITY PLAN - 2]

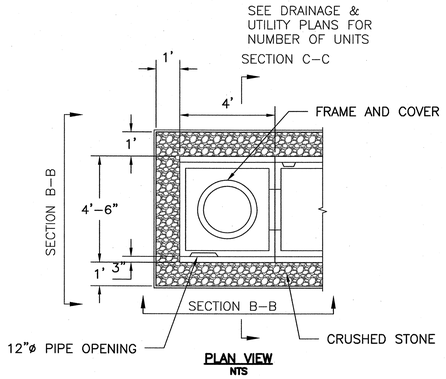


PLAN VIEW
NTS

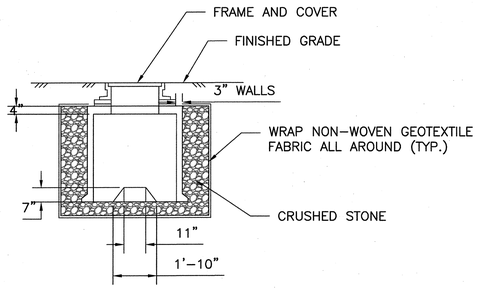


SECTION A–A
NTS

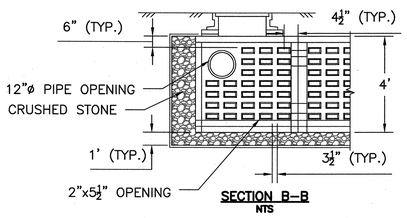


SECTION B–B
NTS

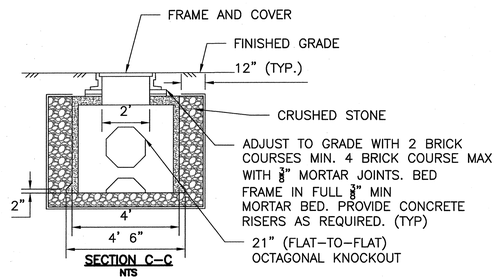


SECTION C–C
NTS

## LEACHING GALLEY

NTS

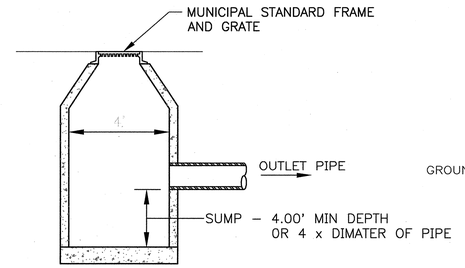


CATCH BASIN MATERIALS AND FABRICATION VARIES
SEE DRAWINGS IN MassDOT "2012 CONSTRUCTION
STANDARD DETAILS"

## DEEP SUMP CATCH BASIN

NTS

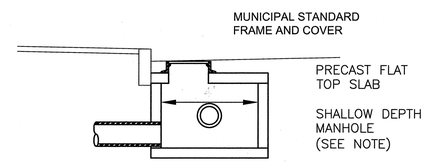


SHALLOW MANHOLE
NTS

NOTE:

1. FOR MANHOLE MATERIALS AND FABRICATION, SEE MassDOT STANDARD SPECIFICATIONS AND DRAWINGS "2012 CONSTRUCTION STANDARD DETAILS".
2. BASED ON ACTUAL FIELD CONDITIONS THE CONTRACTOR SHALL DETERMINE WHICH STYLE OF TOP SECTION SHOULD BE USED.

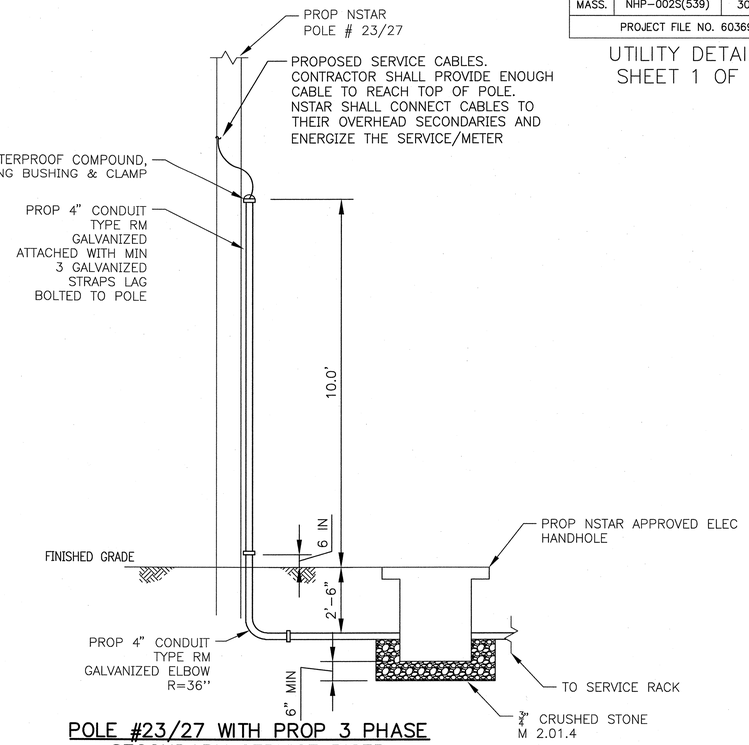


## POLE #23/27 WITH PROP 3 PHASE SECONDARY SERVICE RISER

SCALE: N.T.S.

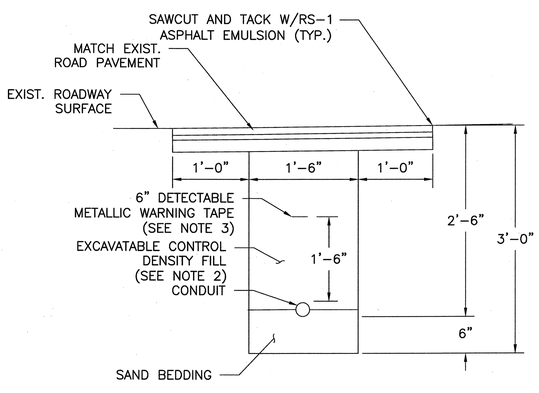


NOTES:

1. SCH 80 ELECTRICAL CONDUIT TYPE NM–PLASTIC (UL), WITH PULL ROPE, UNLESS OTHERWISE APPROVED BY MASSDOT.
2. CONTROL DENSITY FILL SHALL MEET THE REQUIREMENTS OF SUBSECTION M4.08.0
3. WARNING TAPE COLOR SHALL BE PER APWA STANDARDS

## CONDUIT CROSSING ROADWAY

NTS

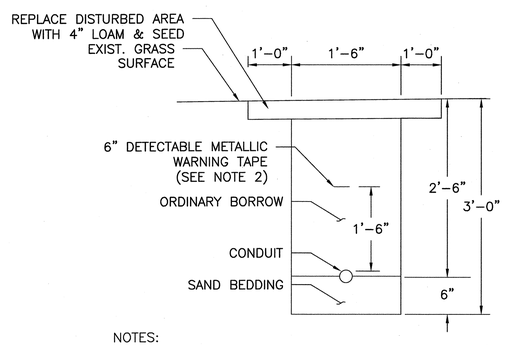


NOTES:

1. SCH 80 ELECTRICAL CONDUIT TYPE NM–PLASTIC (UL), WITH PULL ROPE, UNLESS OTHERWISE APPROVED BY MASSDOT.
2. WARNING TAPE COLOR SHALL BE PER APWA STANDARDS

## CONDUIT UNDER GRASS AREAS

NTS

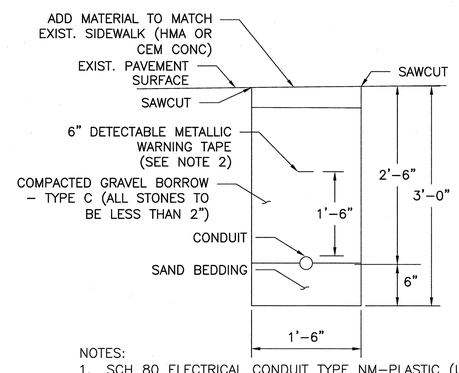


NOTES:

1. SCH 80 ELECTRICAL CONDUIT TYPE NM–PLASTIC (UL), WITH PULL ROPE, UNLESS OTHERWISE APPROVED BY MASSDOT.
2. WARNING TAPE COLOR SHALL BE PER APWA STANDARDS

## CONDUIT UNDER SIDEWALK AREAS

NTS

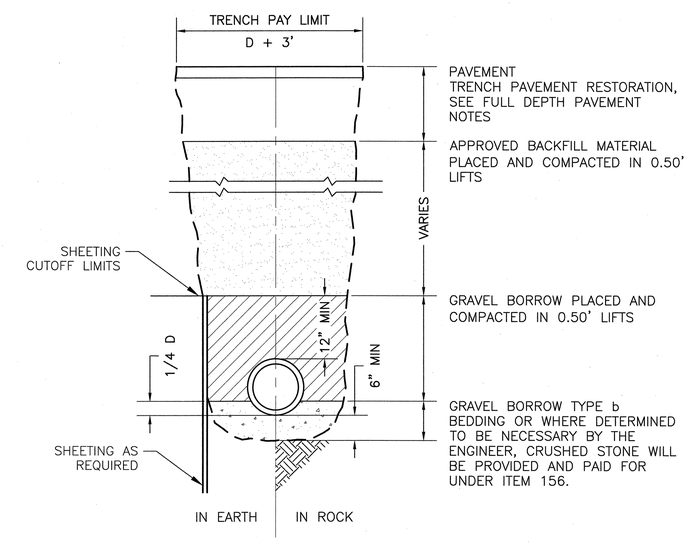


## UTILITY TRENCH DETAIL

NTS

PLOTTED: 10/23/2013 9:29 AM BY: ALEXANDER.CURRIMJEE
DRAWING: P:\KBS-PEA\MASSHIGHWAY\9009 SERIES\M A\SSION #1 – CHATHAM BRIDGE\9.00 CADD – DS – GRAPHICS\10 CADD\GRADING\DWGS\TYPICAL SECTIONS\DWG UTILITY DETAILS – 11\10/24/2013 10:45 AM BY: HANDER.HAMANO

CHATHAM
BRIDGE STREET

| STATE | FED. AID PROJ. NO. | SHEET NO. | TOTAL SHEETS |
|---|---|---|---|
| MASS. | NHP-002S(539) | 31 | 214 |
| PROJECT FILE NO. 603690 | | | |

UTILITY DETAILS
SHEET 2 OF 2

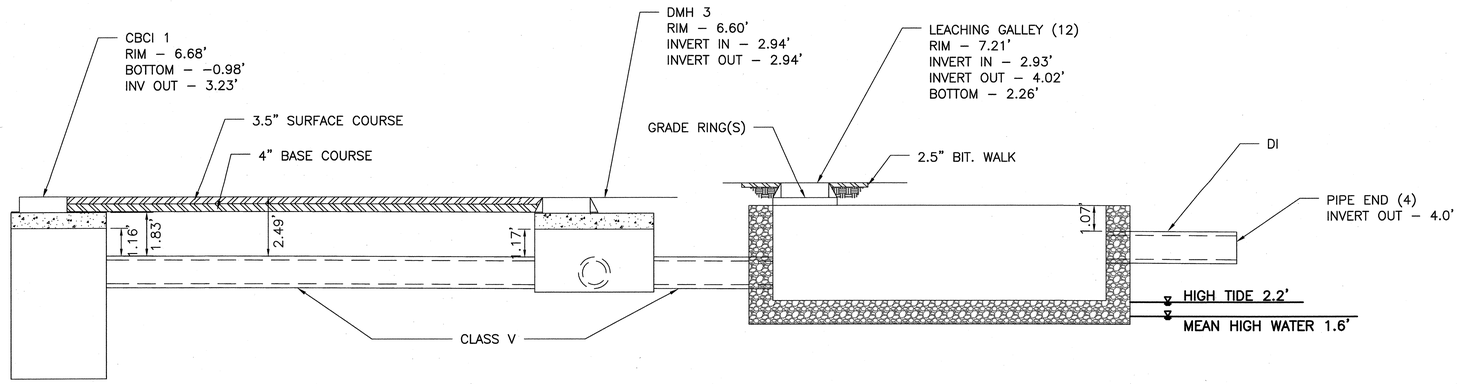


DRAINAGE PROFILE – WEST SIDE
NTS

PLOTTED: 10/23/2013 9:29 AM BY: ALEXANDER, CURRIMJEE
DRAWING: P:\KGS-FED\MASSHIGHWAY\2002 SEPSSOM &VASSON #1 - CHATHAM BRIDGE\500 CADD - DS - GRAPHICS\510 CADD\603690\UD\DWG\TYPICAL SECTIONS.DWG (UTILITY DETAILS - 2) 10/14/2013 10:45 AM BY: HADER, HAMAND

CHATHAM
BRIDGE STREET

| STATE | FED. AID PROJ. NO. | SHEET NO. | TOTAL SHEETS |
|---|---|---|---|
| MASS. | NHP-002S(539) | 32 | 214 |
| PROJECT FILE NO. 603690 | | | |

# LANDSCAPE PLAN
## SHEET 1 OF 2

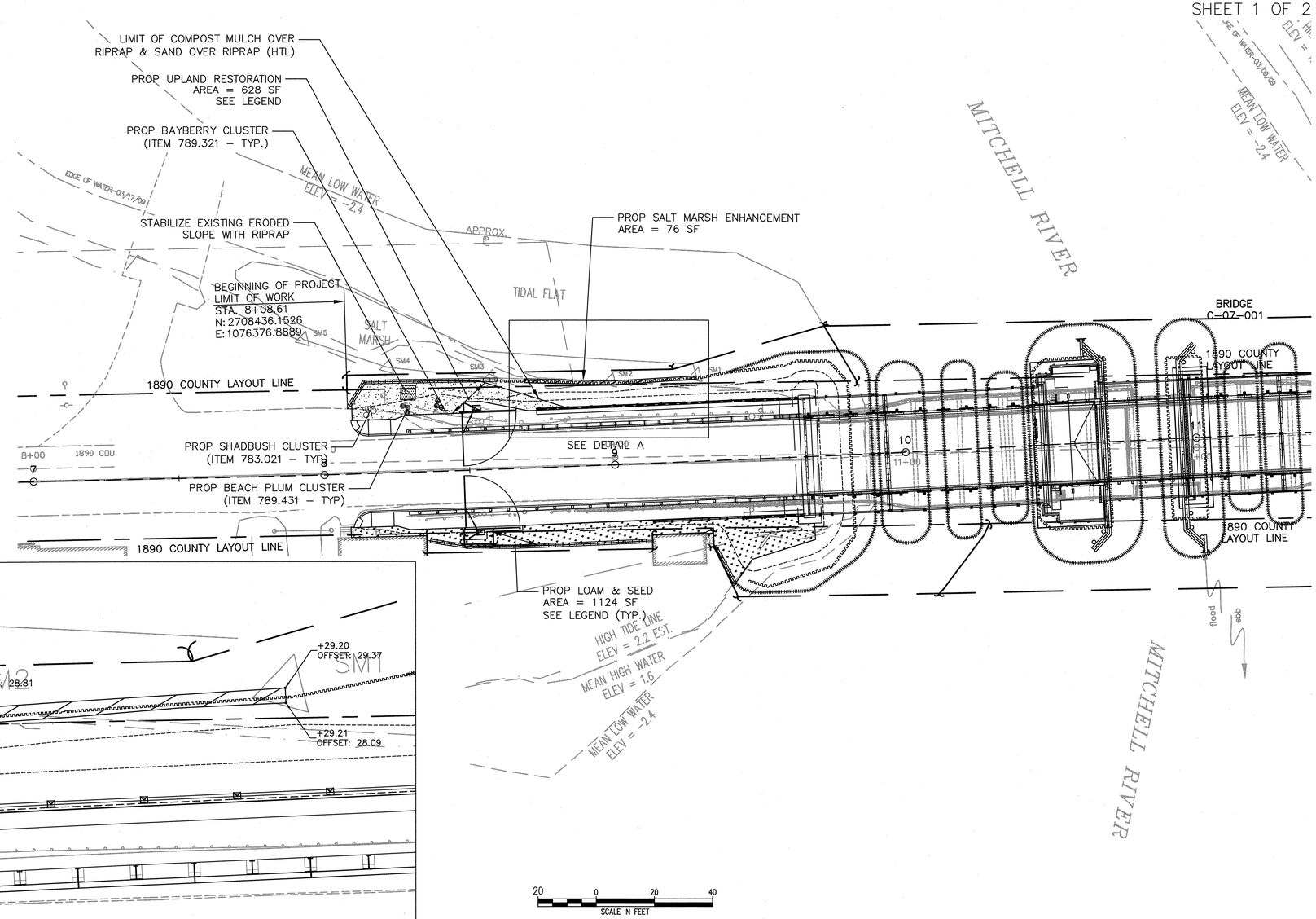


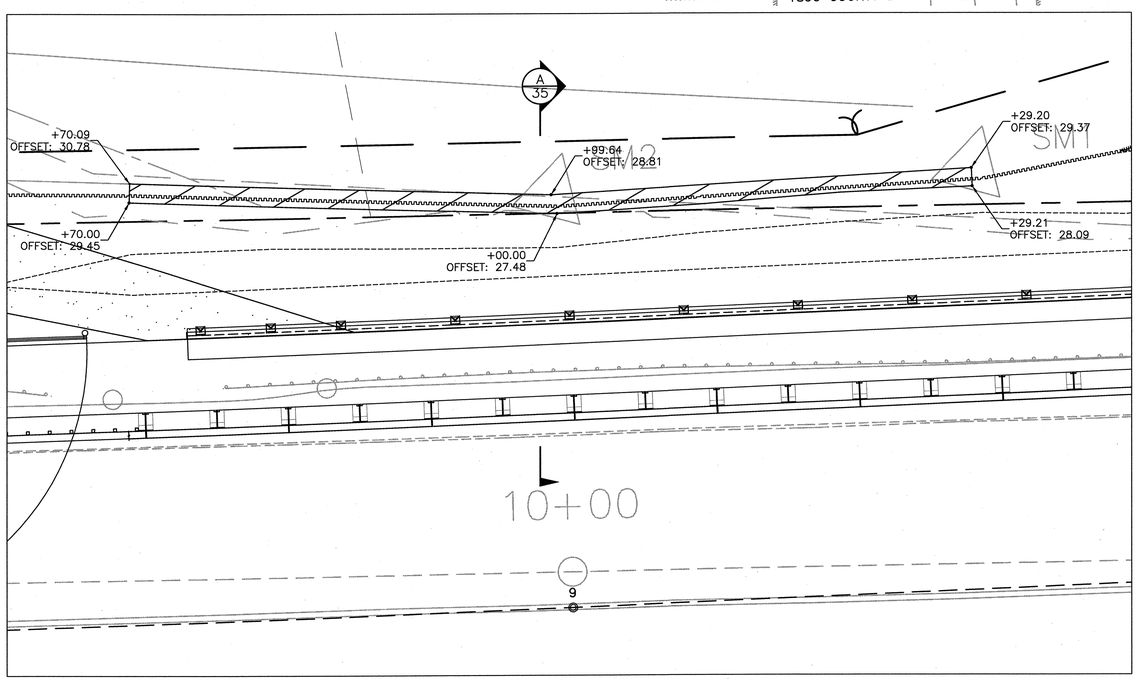


DETAIL A

5 0 5 10
SCALE IN FEET

LEGEND

- PROPOSED UPLAND SEED & PLANTING AREA (ITEM 751.7 & 765.4)
- PROPOSED SALT MARSH ENHANCEMENT AREA (ITEM 755.2)
- PROPOSED LOAM & SEED (ITEM 751 & 765)

PLOTTED: 10/23/2013 9:30 AM BY: ALEXANDER_CURRIMJEE
DRAWING: P:\VOBS-BOY\MASSHIGHWAY\0003 SORENSON & LASSON #1 - CHATHAM BRIDGE\500 CADD - SRS - GRAPHICS\810 CADD\VOBS810\01\WP01\LANDSCAPE PLAN\PWG LANDSCAPE PLAN - 11\10/22/2013 3:38 PM BY: HAIDER.HAMAND

CHATHAM
BRIDGE STREET

| STATE | FED. AID PROJ. NO. | SHEET NO. | TOTAL SHEETS |
|---|---|---|---|
| MASS. | NHP-002S(539) | 33 | 214 |
| PROJECT FILE NO. 603690 | | | |

# LANDSCAPE PLAN
## SHEET 2 OF 2

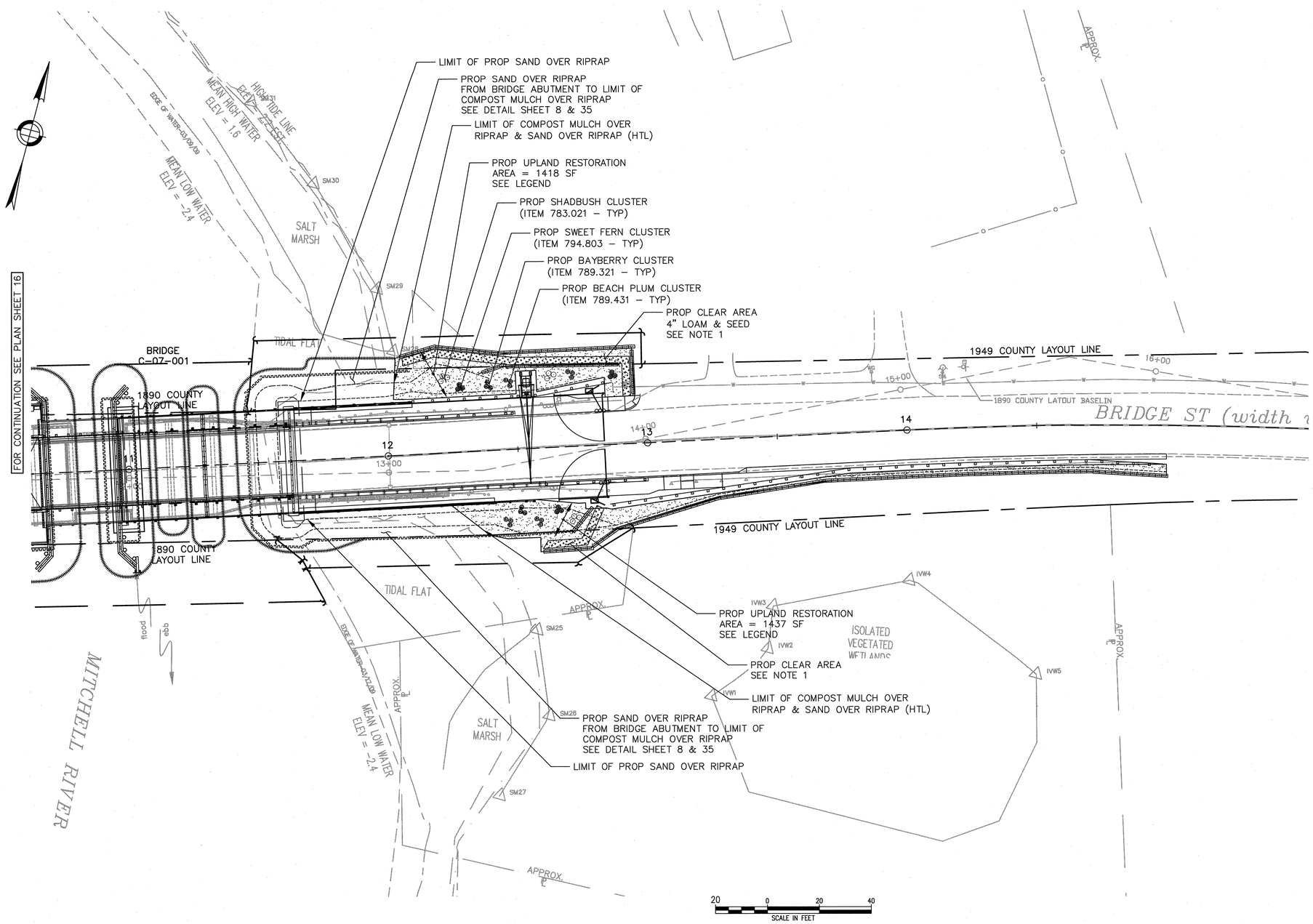


NOTES:

1) CLEAR AREA TO BE SEEDED WITH UPLAND SEED MIX. SEE CLEARED AREA DETAIL ON THE LANDSCAPE DETAIL SHEETS.

LEGEND

PROPOSED UPLAND SEED & PLANTING AREA (ITEM 751.7 & 765.4)

PLOTTED: 10/23/2013 9:30 AM BY: ALEXANDER, CHRIS-KEE
DRAWING: L:\CAD-GIS\MASS-DOT\CAD\09-NHP\603690 SEDGION A\ASSIGN #1 - CHATHAM BRIDGE\500 CADD - GIS - GRAPHICS\510 CADD\603690\LD\DWG\LANDSCAPE_PLAN.DWG [LANDSCAPE PLAN - 2] 10/22/2013 3:38 PM BY: HADER, JHAMAND

| CHATHAM BRIDGE STREET | | | |
|---|---|---|---|
| STATE | FED. AID PROJ. NO. | SHEET NO. | TOTAL SHEETS |
| MASS. | NHP-002S(539) | 34 | 214 |
| PROJECT FILE NO. 603690 | | | |

LANDSCAPE DETAILS
SHEET 1 OF 2

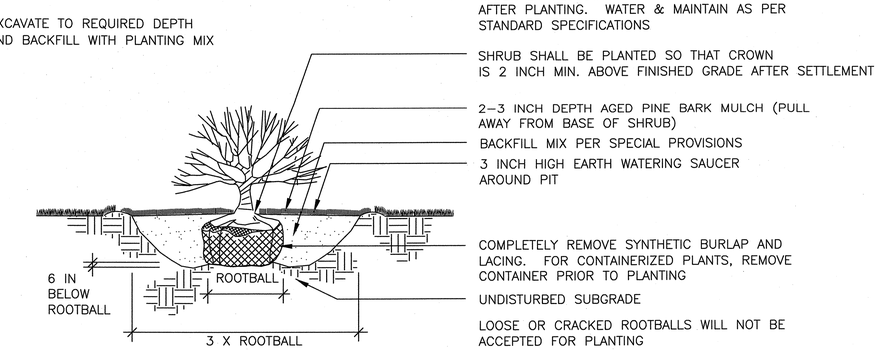


SHRUB PLANTING
NOT TO SCALE

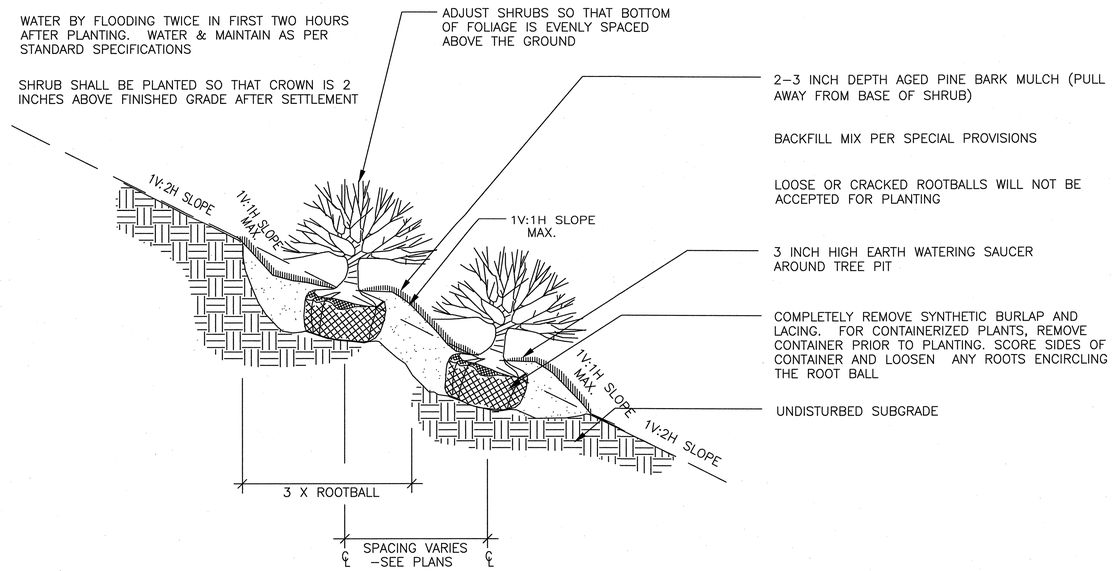


CONTAINERIZED SHRUB PLANTING (SLOPE) DETAIL
NOT TO SCALE

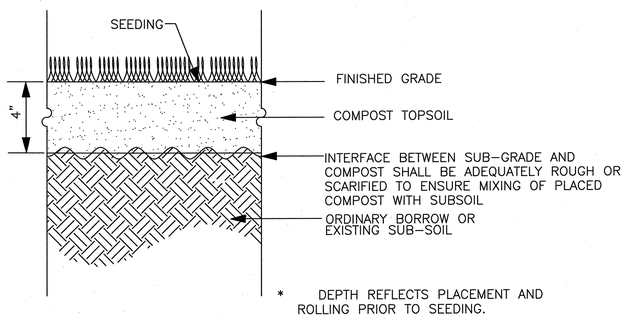


COMPOST TOPSOIL AND SEED DETAIL
NOT TO SCALE

New England Coastal Salt Tolerant Grass Mix
(Application Rate: 35 lbs/acre; 1250 sq. ft./lb.)

| | |
|---|---|
| Creeping Red Fescue | FESTUCA RUBRA |
| Big Bluestem | ANDROPOGON GERARDII |
| Side Oats Grama | BOUTELOUA CURTIPENDULA |
| Sand Lovegrass | ERAGROSTIS TRICHODES |
| Switch Grass | PANICUM VIRGATUM |
| Indian Grass | SORGASTRUM NUTANS |
| Canada Wild Rye | ELYMUS CANADENSIS |
| Little Bluestem | SCHIZACHYRIUM SCOPARIUM |

Typical Layout

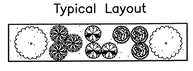

NOTES:

1) SEE SPECIAL PROVISIONS FOR COASTAL SALT TOLERANT SEED MIX.
2) SPECIFIC PLACEMENT OF NATIVE SHRUBS WITHIN THE PLANTING AREA ARE APPROXIMATE AND MAY BE ADJUSTED IN THE FIELD.
3) PROVIDE APPLICATION OF A THIN COAT OF WEED FREE STRAW MULCH IMMEDIATELY FOLLOWING INSTALLATION OF SEEDMIX FOR TEMPORARY STABILIZATION OF LOAM AND PROTECTION OF THE SEEDS, AT NO ADDITIONAL COST.
4) THE PROPOSED SEE MIX SHALL BE LIGHTLY RAKED INTO SOIL SURFACE.
5) PROVIDE APPROXIMATELY 4-6 INCHES OF CLEAN SANDY LOAM TOPSOIL AS NECESSARY TO ENSURE PROPER PLANTING MEDIUM IS ESTABLISHED FOR THE PROPOSED SHRUBS AND/OR SEEDMIX
6) PROVIDE CLEAN ORGANIC LEAF COMPOST AS A SOIL AMENDMENT FOR PROPOSED INDIVIDUAL SHRUBS AT THE TIME OF INSTALLATION,
7) PROPERLY STAKED LOOSE WEAVE (400 GRAMS/SQ. M) COCONUT OR JUTE NETTING IS RECOMMENDED AS A TEMPORARY EROSION CONTROL MEASURE IN THE PLANTING AREA.
8) WHERE COMPOST TOPSOIL IS TO BE PLACED OVER RIPRAP AREAS, FILL RIPRAP VOIDS WITH CRUSHED STONE. ALLOW ONE WEEK AFTER CRUSHED STONE APPLICATION BEFORE PLACING COMPOST TOPSOIL. SUPPLEMENT CRUSHED STONE IF NEEDED BEFORE PLACING COMPOST TOP SOIL.

BRIDGE STREET SUMMARY PLANTING LIST

| COMMON NAME | GENUS/SPECIES | SIZE | PLANTING SPECIFICATIONS | TOTAL NO. | LOCATION | TARGET PLANTING ELEV. |
|---|---|---|---|---|---|---|
| GROUNDCOVER | | | | | | |
| SEASIDE GOLDENROD | SOLIDAGO SEMPERVIRENS | 2" PLUGS (WITH SOIL) | SINGLE, 24 INCHES O.C. | 838 | UP | 2.2'+ |
| SWITCH GRASS | PANICUM VIRGATUM | 1 GAL. POT | SINGLES, 24 INCHES O.C. | 838 | UP | 2.2'+ |
| SHRUBS | | | | | | |
| BAYBERRY | MYRICA PENSYLVANICA | 15"-18" | IN CLUSTERS OF 3 TO 4, 3-4 FEET O.C. | 9 | UP | 2.2'+ |
| BEACH PLUM | PRUNUS MARITIMA | 18"-24" | IN CLUSTERS OF 3 TO 4, 3-4 FEET O.C. | 15 | UP | 2.2'+ |
| SWEET FERN | COMPTONIA PEREGRINA | 1 GAL. POT | IN CLUSTERS OF 3 TO 4, 3-4 FEET O.C. | 9 | UP | 2.2'+ |
| SHADBUSH | AMELANCHIER CANADENSIS | 3 GAL. POT | IN CLUSTERS OF 3 TO 4, 3-4 FEET O.C. | 12 | UP | 2.2'+ |

PLOTTED: 10/23/2013 9:30 AM BY: ALEXANDER_CURRIMJEE
DRAWING: P:\KBS-GEO\MASSHIGHWAY\2009 SERIES\M 5\A5SSIGN_F - CHATHAM BRIDGE\500 CADD - GIS - GRAPHICS\510 CADD\603690\DWG\LANDSCAPE DETAILS - 11\10/22/2013 3:38 PM BY: HAUNER, HAMANDI

CHATHAM
BRIDGE STREET

| STATE | FED. AID PROJ. NO. | SHEET NO. | TOTAL SHEETS |
|---|---|---|---|
| MASS. | NHP-002S(539) | 35 | 214 |
| PROJECT FILE NO. 603690 | | | |

LANDSCAPE DETAILS
SHEET 2 OF 2

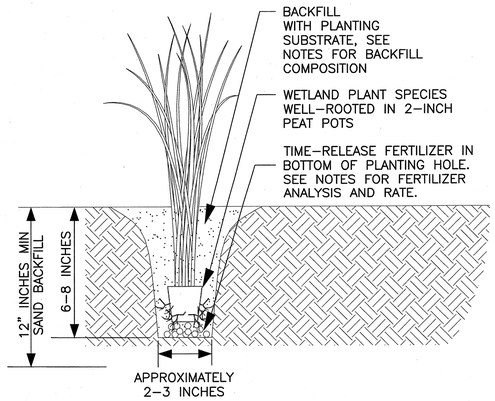


SALT MARSH PLANTING
NOT TO SCALE

NOTE: GROUNDCOVER THROUGHOUT SALT MARSH ENHANCEMENT AREA SHALL BE PLANTED WITH SMOOTH CORDGRASS WITH 2" PEAT POTS PLANTED 12" ON CENTER.

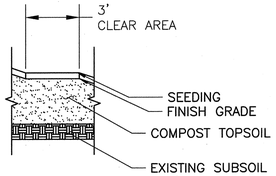


CLEARED AREA DETAIL
NTS
* SEE COMPOST TOPSOIL & SEEDING DETAIL FOR SPECIFIC DEPTHS & MATERIALS

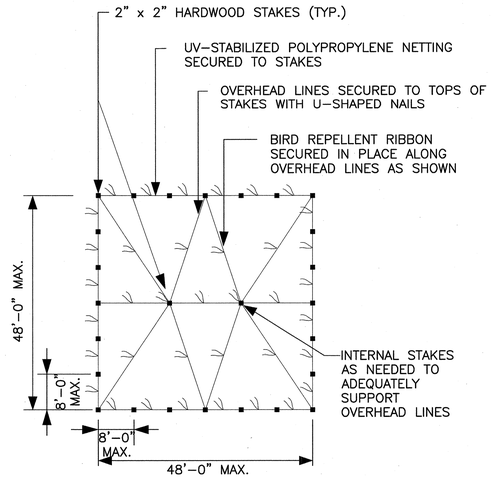


PLAN VIEW

NOTE: ACTUAL SIZE AND SHAPE OF CELLS WILL BE DETERMINED BY CONFIGURATION OF PLANTING AREA. FENCE SHALL ENCLOSE ALL WETLAND PLANTINGS AND INCLUDE A 2-FOOT (MIN.) MARGIN AROUND PERIMETER OF ALL NEW PLANTS.

FOR LARGE SITES WHERE THERE IS NO PERIMETER ACCESS TO INDIVIDUAL CELLS FOR MONITORING, PROVIDE 3-FOOT WIDE, UNPLANTED ACCESS AISLES BETWEEN EVERY OTHER CELL AND PARALLEL IN ONE DIRECTION. FOR VERY LARGE SITES OF MANY ACRES, PROVIDE AISLES THAT CAN ACCOMMODATE AN ALL-TERRAIN VEHICLE SUITABLE FOR USE IN MARSH CONDITIONS.

GOOSE FENCE SHALL BE USED IN AREAS OF SALT MARSH ENHANCEMENT AND AS DIRECTED BY THE ENGINEER.

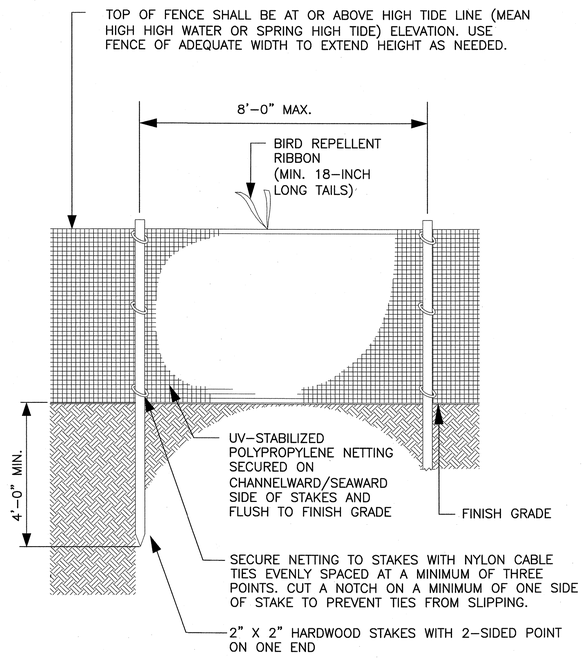


GOOSE FENCING
NOT TO SCALE

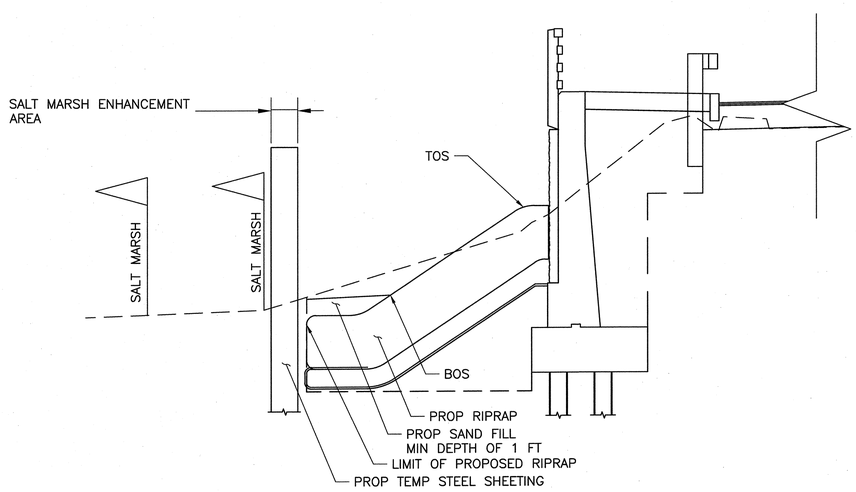


SALT MARSH ENHANCEMENT SECTION
SECTION A
NTS

PLOTTED: 10/23/2013 9:30 AM BY: ALEXANDER_CURRIMJEE
DRAWING: P:\KGE-FED\MASS\GHW\2009 SERIES\H SLASSON #1 - CHATHAM BRIDGE\500 CADD - GS - GRAPHICS\510 CADD\69690\LD\DWG\LANDSCAPE PLAN\DWG [LANDSCAPE DETAILS - 2] 10/22/2013 3:38 PM BY: HARDER,HAMANDI