PIER CAP ALTERNATIVES EVALUATION

for

BRIDGE STREET

over

MITCHELL RIVER

BRIDGE NO. C-07-001 (437)

DISTRICT 5

CHATHAM

MASSACHUSETTS

Prepared for:

Commonwealth of Massachusetts

MassDOT

10 Park Plaza, Boston, MA 02116

Prepared by:

URS Corporation

260 Franklin Street, Boston, MA 02110

January 9, 2013

1.0 SUMMARY

This report was prepared to evaluate pier cap alternatives for the approach spans for the new Mitchell River Bridge, Chatham, MA. This evaluation was conducted in fulfillment of the commitment that FHWA and MassDOT made in the Memorandum of Agreement (MOA) prepared for this project and signed by the principal Consulting Parties to the process recognized under Section 106 of the National Historic Preservation Act of 1966, as amended.

Details and descriptions provided herein have been advanced to the point of facilitating this discussion, but have not been thoroughly completed by the designers or approved by MassDOT and FHWA reviewers beyond the conceptual level. All details provided herein have been developed to a level necessary to conduct an evaluation of the alternatives in order to make an informed decision on the appropriate treatment.

Three general pier cap alternatives have been considered in this evaluation:

1. All Wood Pier Cap
2. All Concrete Pier Cap
3. Concrete Pier Cap with wood cladding

Alternatives 1 and 2 are presented for review as provided for in the MOA. Alternative 3 has been added by MassDOT to offer another potential means of providing an aesthetically pleasing approach to the final design of the pier caps.

Each alternative has been considered in relation to:

- Technical/structural suitability,
- Constructability/connectivity to the steel piles and the wood superstructure,
- Inspection and maintenance aspects,
- Extent of Wood Usage/Aesthetics, and
- Expected durability within the project environment.

In general, the goal of this evaluation is to identify an appropriate solution that promotes architectural blending of the pier cap into the existing bridge setting and the proposed wood superstructure. This report presents pros and cons of each alternative, and the alternative that best satisfies these criteria is recommended.

2.0 INTRODUCTION

Wood, concrete and concrete with wood cladding are the materials that have been considered for pier cap construction for the new Mitchell River Bridge. FHWA funding criteria requires that the structure offer a 75-year service life. The pier cap must also safely support the superstructure, must provide for the required visual and tactile inspections, and should be relatively easy to maintain and repair in case of isolated damage or deterioration.

3.0 DESCRIPTION OF ALTERNATIVE CONSIDERED

The following three (3) alternatives are being considered:

Alternative 1: All wood Pier Cap
Alternative 2: All Concrete Pier Cap
Alternative 3: Concrete Pier Cap with wood cladding

3.1 Alternative 1 – All Wood Pier Cap

This Alternative utilizes a fully wooden pier cap consisting of Glued Laminated Timber (glulam) that would be affixed to the steel piles to distribute the load from the wood deck beams above to the steel piles below (Figure 1). The wood pier cap would be connected to the steel piles through a structural steel pile cap assembly.

3.1.1 General

To satisfy the strength requirements to carry the imposed loads and to support its function to distribute those loads evenly to the steel piles below, the wood pier cap would need to be about 28 inches wide by 19¼ inches deep. The use of sawn lumber (milled directly from a log) is not practical due to lack of available material of the size necessary for the superstructure loads and pile configuration. To accomplish the required sizing, the pier cap would likely consist of two large glulam members bolted together.

The glulam members would be fixed to each pile using a steel pipe collar and a steel cap plate with steel bent plates (see detail, Figure 2). The steel cap must be wide enough to support the entire width of the beam plus the bent plates used to anchor the beam to the pile. The cap would be at least 18 inches wider than the glulam pier cap, 9 inches on each side to connect the steel bent plates to the cap. The collar and cap would be shop assembled and placed onto the steel piles after the piles have been driven, cut to the required elevation and filled with concrete. Three (3) holes would be field drilled through the glulam pier cap for connection to the steel bent plates at each pile location. The bent plates would also be connected to the pile caps using four bolts on each side.

The deck beams of the superstructure would be bolted to the top of the pier caps after the pier caps have been connected to all of the piles at each bent. These connections would use a pair of steel angles to connect the glulam beams to the glulam pier caps. All holes would be drilled in the field.

3.1.2 Technical/Structural Suitability

Glulam offers the strength to make it a suitable choice for large, open designs where long spans are required. Glulam beams can be manufactured in virtually any size, and beams of equal or greater strength and stiffness can often be substituted for sawn lumber or steel beams.

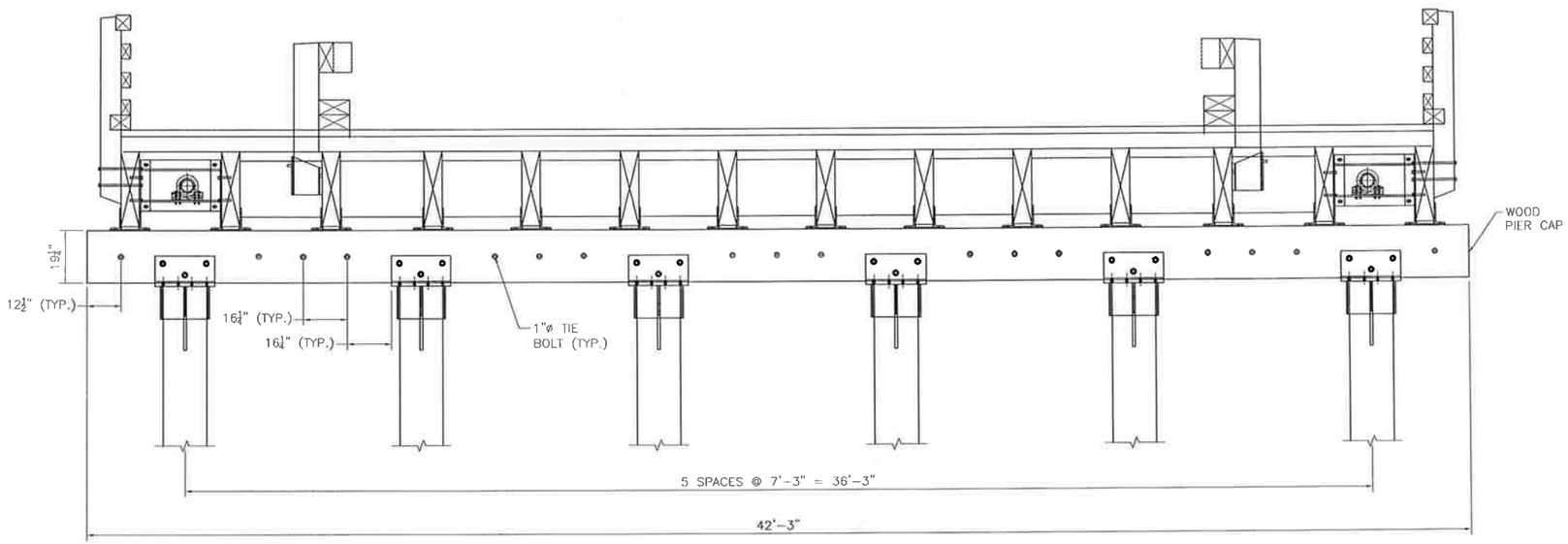

ELEVATION

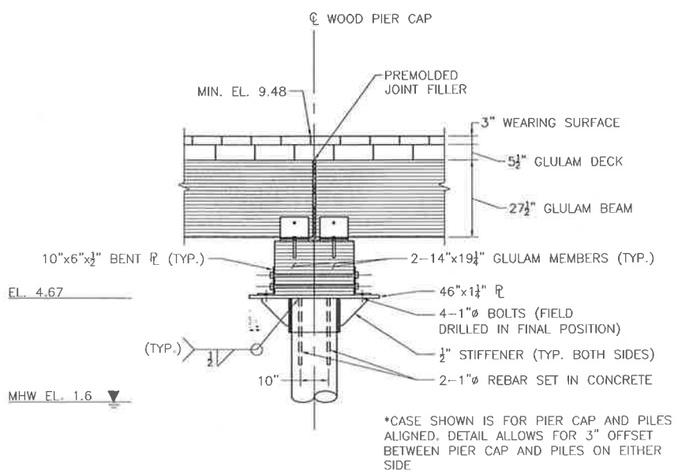

GLULAM PIER CAP SECTION

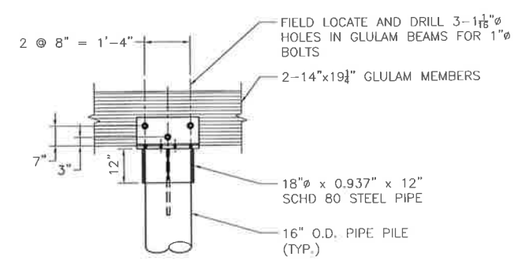

ELEVATION – PILE CAP CONNECTION

FIGURE 1

ALTERNATIVE 1 - ALL WOOD PIER CAP

massDOT
Massachusetts Department of Transportation
Highway Division

CHATHAM
BRIDGE NO. C-07-001 (437)
BRIDGE STREET
OVER MITCHELL RIVER

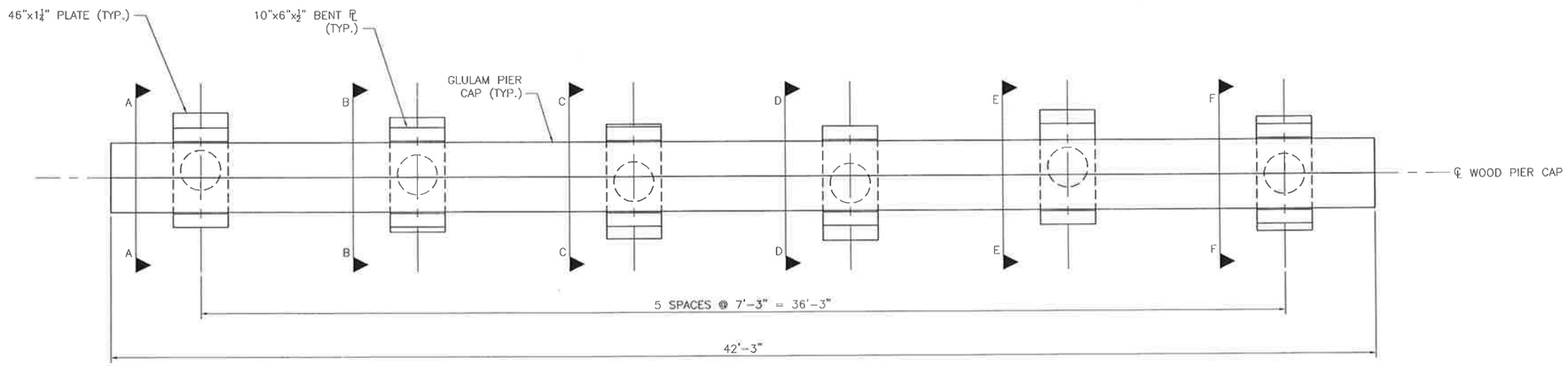

PIER CAP PLAN*

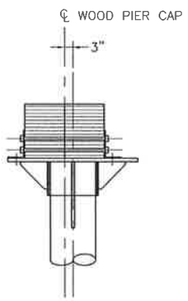

SECTION A–A

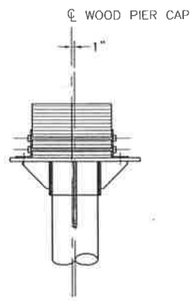

SECTION B–B

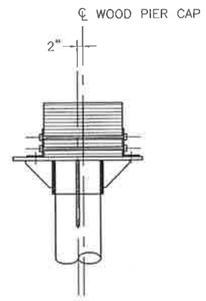

SECTION C–C

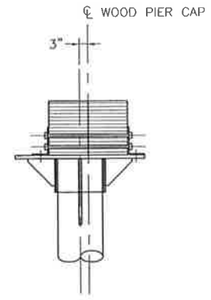

SECTION D–D

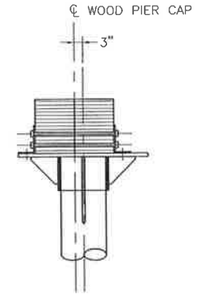

SECTION E–E

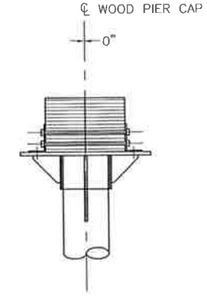

SECTION F–F

*PLAN IS INTENDED TO REPRESENT THE POTENTIAL AS–BUILT STRUCTURE, ACCOUNTING FOR PILE PLACEMENT TOLERANCES

FIGURE 2

ALTERNATIVE 1 - ALL WOOD PIER CAP

massDOT
Massachusetts Department of Transportation
Highway Division

CHATHAM
BRIDGE NO. C-07-001 (437)
BRIDGE STREET
OVER MITCHELL RIVER

3.1.3 Constructability/Connectivity to the Steel Piles and the Wood Superstructure

The general construction sequence with respect to the glulam pier caps would consist of:

- Drive pipe piles
- Cut-off pile tops to a precise elevation
- Place concrete within piles
- Lift collar/cap assembly (approx. 600 lbs) onto each pile
- Lift glulam pier cap (approx. 5700 lb) into position atop piles
- Mark and drill three (3) through-bolt holes across pier cap at each pile
- Apply preservative treatment within bolt holes
- Insert through-bolts
- Set bent plates to pier cap and pile cap assembly
- Touch-up damaged pile and cap assembly coatings
- Connect deck beams to pier cap

As described above, 3 threaded rods would be required to fasten the pier cap at each pile location. The presence of holes in the wood will make the member more susceptible to damage and decay. To protect against exposure to the marine environment, the fasteners should be fabricated of highly durable material, such as stainless steel, to reduce susceptibility to corrosion and its potentially damaging effects on the wood.

All of the holes in the pier caps would be field drilled to assure proper placement and fit of the pier cap atop the piles. Likewise, the holes for the deck beam to pier cap connections would be drilled only after the pier cap is set. Preservative material would be applied within the holes before the fasteners are inserted. However, the relatively small diameter holes in relation to the depth will make field applications difficult. A typical method would consist of using a funnel and tube to pour the preservative into the bolt holes[1], but this will only treat the surface of the wood within the hole. In time, the surface treatment will vanish leaving the interior of the pier cap vulnerable to attack.

It is worth noting that the steel piles must be cut evenly with very good precision to the correct elevation (less than ¼ inch tolerance) to assure that the cap beam rests evenly across the pier bent without shimming. Another important concern is that the pile driving tolerances typically allow for a 3-inch horizontal deviation from the specified position. Envisioning the center of the pier, an observer would see that the piles would be slightly out of alignment. Because of this and the need to place the pier cap over the piles and attach the bent plates to the outside of the glulam, the steel pile cap connection plate will need to be wider than the pier cap to accommodate this potential horizontal deviation of six inches between piles (Figure 2).

[1] http://www.americanpoleandtimber.com/pdf/army_marine_treatment_recommendations.pdf

3.1.4 Inspection and Maintenance

This bridge will remain on MassDOT's biannual bridge inspection list. The Town of Chatham will periodically conduct its own, less formal observation of the structural members and replace items such as loose or broken decking. Inspection of the structure should be straight forward as all of the elements will be both visible and accessible to the inspectors.

The welded collar and cap assembly introduces other durability concerns. The steel collar will be placed around the pile after it has been driven and cut off to the appropriate elevation. The placement process may damage the shop-applied coating, so the contractor would be required to field apply an overcoat of the damaged areas after the steel connections have been secured. Field coatings may be less protective than shop applied materials.

The steel pile connection plate must be wider than the pier cap so that the angles or bent plates can be attached to the face of the pier cap. Because of this, there would be a tendency for moisture to accumulate on the steel connection plate. Although the caps will be mostly under the superstructure, the superstructure would be an open deck and would allow water through. Shading from the structure above will prevent the collected water from evaporating as quickly as water on the surface. Water that gets between the steel bent plate and either the steel pile caps or the glulam pier cap would represent a threat of serious damage to the structure. As has been found in the case of the Minneapolis I-35 bridge collapse, the strength of a bridge is only as good as its weakest connections.

In general, the painted steel connecting members (collar, cap and bent plates) should undergo periodic cleaning and recoating to limit corrosion. Corroded steel members can have two noteworthy effects:

1) Members could become sufficiently damaged and weakened if unmaintained to threaten structural capacity
2) As steel corrodes, it has a tendency to expand. In this instance, the expanding steel could induce unintended stresses into the wood, perhaps leading to damage that would allow moisture and organisms access into unprotected wood.

The Town will be required to clean and reapply coatings to the steel members periodically as the years go on. Periodic inspection and appropriate recoating of the steel connections on a regular schedule should forestall the types of damage described above.

3.1.5 Extent of Wood Usage/Aesthetics

This alternative provides a solution that maximizes the use of wood in the pier cap. The pier cap would be constructed entirely of wood, with a connection assembly consisting of galvanized and epoxy painted steel shapes and marine grade hardware.

The steel pile cap connection plates may be intrusive to views from below the bridge.

3.1.6 Expected Durability within the Project Environment

Wood preservation techniques would be implemented for glulam members. Although the pier caps would be generally out of the water, they would be subject to wave action and periodic splashes. In fact, the pier cap nearest to the west abutment may be partly submerged on rare occasions because of severe storm tides.

The recommended preservative treatment would consist of pentachlorophenol carried in an oil base. According to a publication from the US Forest Service[2], pressure treated penetration levels can vary widely. The publication notes "the heartwood of coastal Douglas-fir, southern pines, and various hardwoods, although resistant, will frequently show transverse penetrations of 6 to 12 millimeters (¼ to ½ inch)." Glulam is typically fabricated from Douglas-fir or Southern Yellow pine. Therefore, it is expected only the near surface material of the large glulam members would be treated. As the wood ages, dries, checks and splinters over time, the preservative treatment on the surface will become less effective and moisture would begin to penetrate. MassDOT could specify treatment of each glulam strip (about 13/8" to 1½" to inch per lam) before lamination, but this becomes time consuming and many glulam manufacturers may not offer the process[3], limiting price competition. The added processes plus the limited number of glulam fabricators suggests that pressure treatment of individual laminations may add considerable expense to the member. As a result, treatment of the individual laminations before fabrication may not be prudent.

The service life of wood caps can be extended a limited duration following damage or decay with the addition of steel reinforcing plates (which would have their own ongoing maintenance requirements). However, it is anticipated that the glulam caps would still need to be replaced at least once during the service life of the bridge. Because it may be impractical to jack up the bridge to slide out a nearly 3-ton, 42-foot member, it is reasonable to assume that the entire superstructure (or approach structure on the same side of the channel) will have to be removed to replace a pier cap that is in a poor or failed condition.

3.1.7 Summary of Pros and Cons

Pros:

- ☑ Structurally sufficient
- ☑ Maximizes use of Wood

---

[2] Preservative-Treated Wood and Alternative Products in the Forest Service [http://www.fs.fed.us/t-d/pubs/htmlpubs/htm06772809/page04.htm#pr]

[3] Preservative Treatment of Glued Laminated Timber, Technical Note Number S580C, Aug, 2006, [http://www.anthonyforest.com/pdfs/APA-Preservative-Treatment-of-Glued-Laminted-Timber.pdf]

- ☑ Relatively inexpensive members

Cons:

- ☒ Relatively difficult field assemblies
- ☒ Requires near precise steel pile cut-off
- ☒ Field-drilled bolt holes in cap increase susceptibility to decay
- ☒ Steel cap and bent plate increase corrosion potential
- ☒ Pier cap service life of 30 to 40 years does not meet the 75-yr service life required by FHWA
- ☒ Steel connecting members must be regularly cleaned and recoated
- ☒ Avoidable additional costs to bridge owner resulting from reduced pier cap service life

3.2 Alternative 2 – Concrete Pier Cap

This alternative consists of a concrete pile cap (Figure 3) that encapsulates and fixes the steel piles to distribute the load from the wood deck beams above to the steel piles below. The structural connection between the piles and the pier cap would be made within the concrete cap. The concrete could be textured and stained to offer the appearance of weathered wood.

3.2.1 General

To accommodate the strength needed to support the loads and to carry out its function to distribute load evenly to the piles, a concrete pier cap would be about 36-inches wide and 36-inches feet deep. Additional width may be necessary to account for the thickness of non-structural concrete used to texture the exposed faces of the pier cap. The steel piles would be embedded about 12 inches into the concrete pier cap. This sizing provides for structural needs of the cap, the internal reinforcing between the cap and the steel piles, and the appropriate embedment of the reinforcing steel to minimize the chances that it would be affected by moisture.

3.2.2 Technical/Structural Suitability

Concrete pier caps and steel piles constitute the standard substructure materials utilized in New England marine bridge construction by MassDOT. Though steel is susceptible to corrosion, a combination of conservative design, preservative treatment and cathodic protection make it a durable construction material in a marine environment. Likewise, concrete offers superior strength and durability, especially when admixed with minerals and substances that reduce pores where moisture and chlorides can penetrate. A concrete cap would be relatively insensitive to a miscut pile elevation since the connection between the pile and the pier cap is achieved through tension in the reinforcing steel and not though direct bearing.

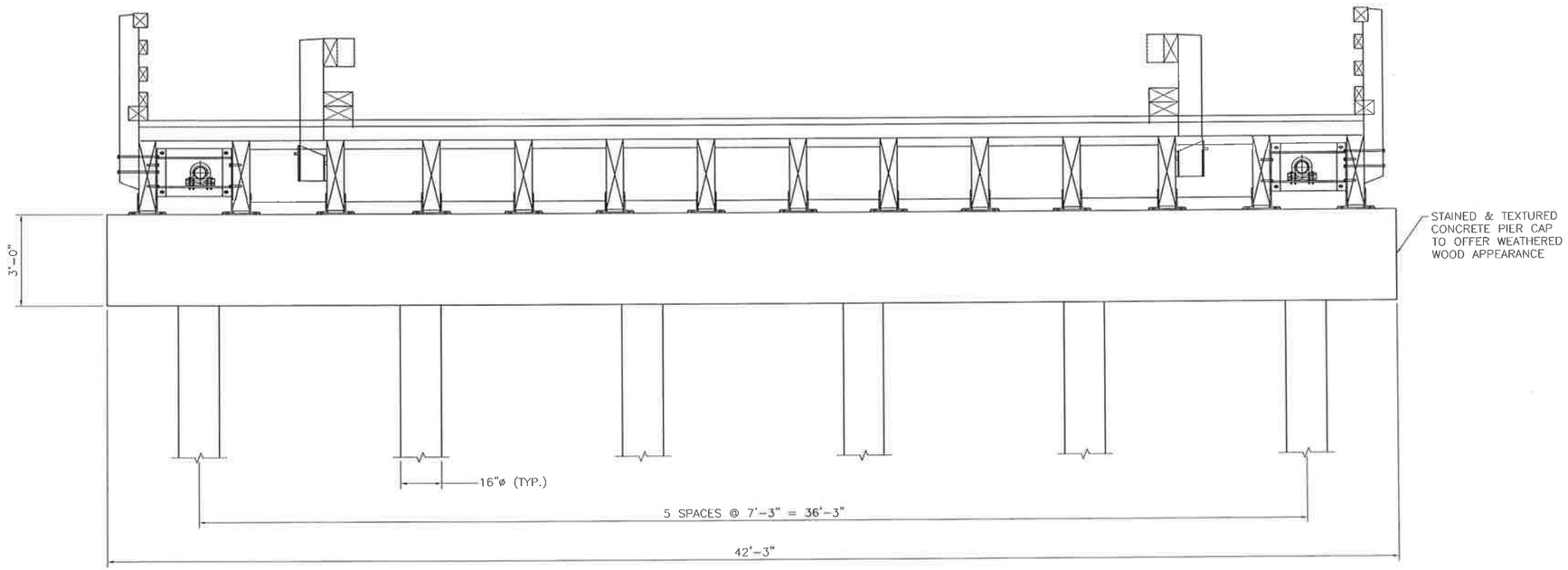

ELEVATION

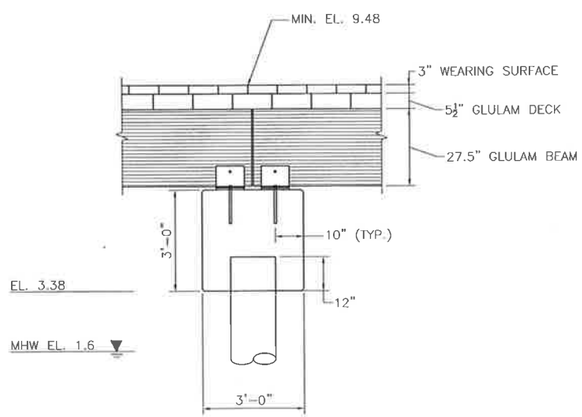

CONCRETE PIER CAP SECTION

FIGURE 3

ALTERNATIVE 2 - ALL CONCRETE PIER CAP

massDOT
Massachusetts Department of Transportation
Highway Division

CHATHAM
BRIDGE NO. C-07-001 (437)
BRIDGE STREET
OVER MITCHELL RIVER

3.2.3 Constructability/Connectivity to the Steel Piles and the Wood Superstructure

As noted, the pier cap and the piles would be connected through an epoxy-coated steel reinforcing cage set before placement of the concrete cap. In addition, threaded steel rods would be set at the top of the cap to allow fastening of the wood deck beams to the cap after the concrete has set. Steel bent plates or clips would be bolted down to secure the wood deck beams to the pier cap. Deck beams would be field drilled to connect each beam to the pier cap.

3.2.4 Inspection and Maintenance

Inspection of a concrete pier cap and connections would be routine since no external connections would need to be checked and the entire cap would have clear sight lines on each face and from below. Similar care would be required when inspecting the deck beam connections as for the glulam pier cap alternative, though the concrete cap would be more durable than a wood cap.

3.2.5 Extent of Wood Usage/Aesthetics

The Concrete Pier Cap alternative does not include wood elements.

Concrete can be placed using form liners that leave a textured surface finish that simulates the softer appearance of wood. The formed concrete faces could be stained to a desired color. Staining may represent an appealing method to achieve the final context goals for this cap since together with the right formwork pattern, it offers the ability to give the concrete a wood-like appearance. The concrete could be stained a charcoal/grayish tint to blend with the wood as it ages. See the appendices for rendered views of this alternative. Please refer to Appendix I for representative renderings of this alternative, and to Appendix II for information on texturizing the facades.

3.2.6 Expected Durability within the Project Environment

Research and experience have shown that a 75-year service life can be readily and cost effectively achieved utilizing marine concrete. The US Naval Facilities Command[4] (NAVFAC) identifies a 75-year service life without major restoration and with only minimal maintenance as its functional target performance expectation. NAVFAC's has developed its own material specification for Marine Concrete to best assure that the required service life can be achieved. MassDOT's own concrete mix specification provides for similar endurance.

Recently, Delaware DOT dictated that each structural component used to reconstruct the Indian River Inlet Bridge be designed for a 100-year service life. Low permeability concrete was the material of choice for both the concrete superstructure and the

[4] Unified Facilities Guide Specification for Marine Concrete [USGS-03 31 29 (February 2010)]

substructure[5]. This new bridge will be the fifth bridge constructed across the inlet in just over 60 years, and DelDOT has sought to put an end to this unacceptable replacement cycle by raising the bridge and by implementing performance-based concrete replacement structure to replace the current steel bridge.

Given advances in concrete technology and construction practices, a 75-year service life is well within the achievable range for this alternative.

3.2.7 Summary of Pros and Cons

Pros:

- ☑ Structurally durable and long lasting (minimum 75-year service life)
- ☑ Low maintenance
- ☑ Routine inspection and maintenance
- ☑ Can be colored and textured as desired

Cons:

- ☒ Not Constructed with Wood

3.3 Alternative 3 – Concrete Pier Cap with Wood Cladding

With this alternative, the pier cap would be constructed using concrete as the main structural material. The vertical faces clad with wood after the formwork has been removed. The concrete would not be textured or colorized.

3.3.1 General

A concrete pier cap with wood cladding would be the same height as Alternative 2. Cladding could consist of individual planks or marine plywood having a plank-like surface (Figure 4). However, the structure would be 6-12 inches wider than Alternative 2 to provide for embedded rods that would extend outboard of the face to affix the wood cladding. Except for the cladding, this alternative would be structurally identical to Alternative 2.

3.3.2 Technical/Structural Suitability

This alternative would be structurally identical to Alternative 2.

[5] *Indian River Inlet Bridge – Surviving the Storm,* ASPIRE, The Concrete Bridge Magazine, Winter 2012

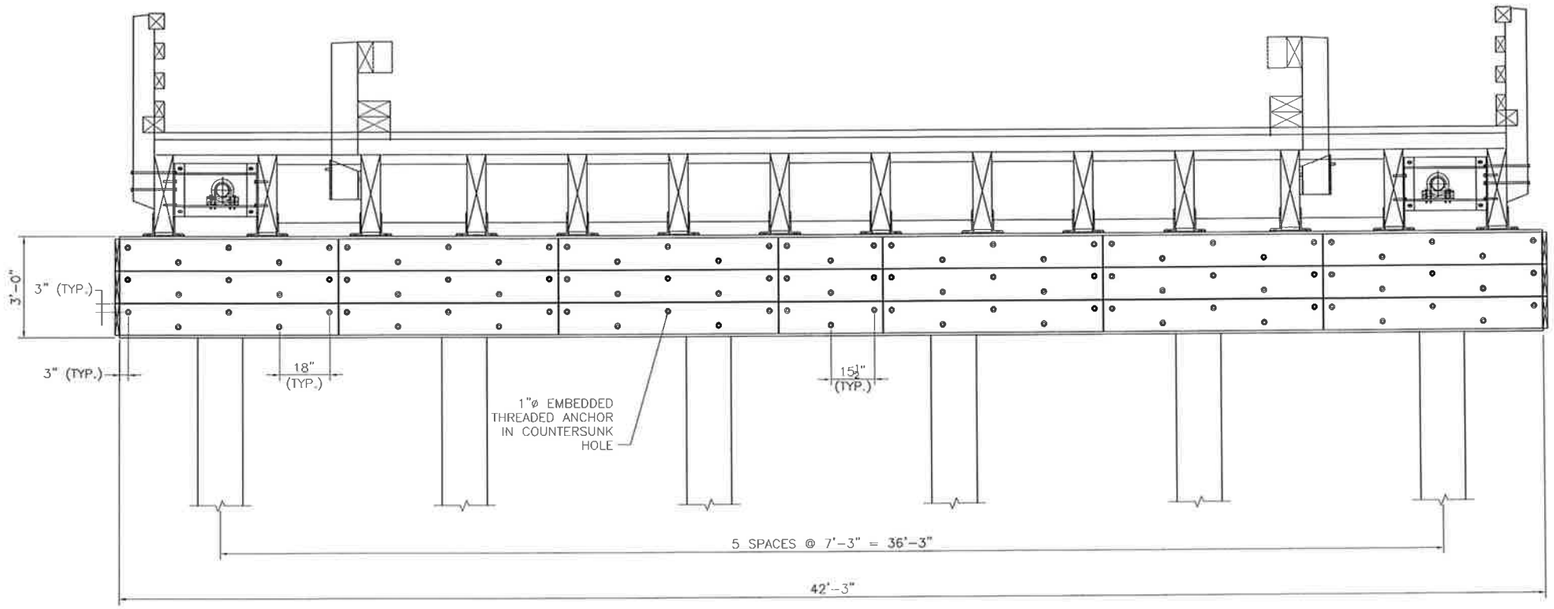

ELEVATION

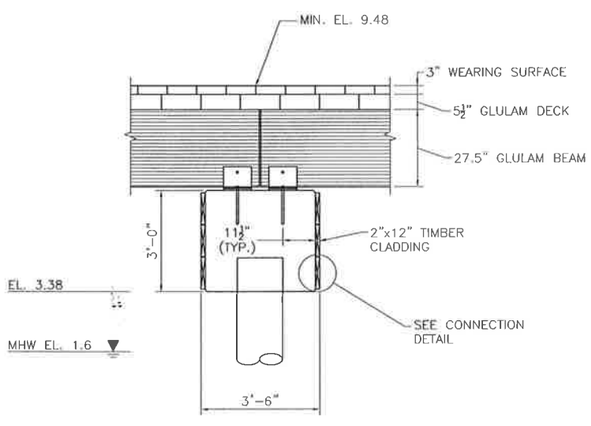

TIMBER CLAD CAP SECTION

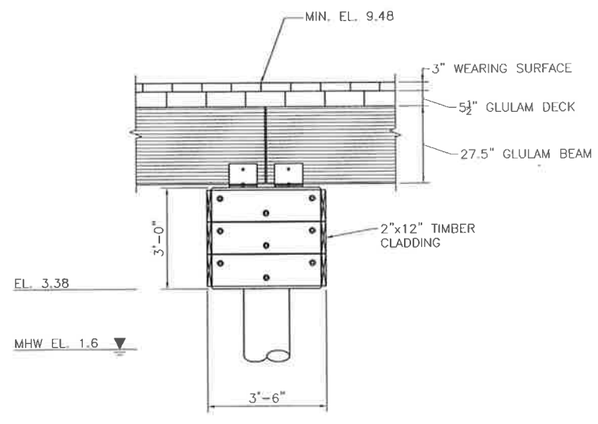

TIMBER CLAD CAP ELEVATION

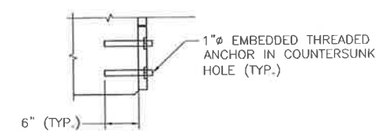

CONNECTION DETAIL

FIGURE 4

ALTERNATIVE 3 - CONCRETE PIER CAP WITH WOOD CLADDING

massDOT
Massachusetts Department of Transportation
Highway Division

CHATHAM
BRIDGE NO. C-07-001 (437)
BRIDGE STREET
OVER MITCHELL RIVER

3.3.3 Constructability/Connectivity to the Steel Piles and the Wood Superstructure

This alternative offers a similarly constructible concrete pier cap as Alternative 2. Neither the underside nor the top of the concrete pier cap would be clad, so there would be no additional complications with regard to connectivity above or below.

The wood cladding would offer some construction difficulties because the holes would have to be field drilled based on the location of the anchors embedded in the face of the concrete pier cap.

3.3.4 Inspection and Maintenance

This alternative presents significant inspection and maintenance concerns with respect to the cladding. Inspecting the pier cap would be considerably more labor intensive. Inspectors would be required to unfasten the cladding to observe the concrete pier cap, and then they must reattach the cladding. If the cladding consists of individual planks, there would be many more bolts than a marine plywood solution. However, the marine plywood would be larger/heavier and more difficult for the inspectors to handle. In either case, the bolts will number in the hundreds for each pier cap. Further, with either option there is risk that corrosion of the nuts will increase the difficulty of removing the cladding as time moves on. Nuts dropped and lost in the water below would add a nuisance factor. If not replaced, a new avenue for water penetration would be created.

The cladding would decay and require replacement more frequently than other members. Because the planks or plywood would be relatively thin, even a modest decay around the connections would make reattachment of the cladding more difficult after inspection. Decay is a significant threat. Bolt holes would offer an enormous opportunity for moisture and organisms to find their way into the wood. In addition, stormwater that trickles through the superstructure is likely to enter the space between the concrete and the cladding and become trapped. Flashing could limit moisture penetration, but this adds cost and yet another non-wood element to be removed and re-attached during each inspection cycle.

Replacement of individual cladding members would add to the long term maintenance cost of the bridge and would also result in an unattractive assemblage of wood members of different ages over time.

3.3.5 Extent of Wood Usage/Aesthetics

This alternative offers a higher extent of wood usage than the all concrete alternative. However, due to the number of bolts required, the visual appearance would deviate dramatically from the existing pier caps. Also, over time, mismatched wood or even the absence of some cladding would result in a less desirable appearance.

3.3.6 Expected Durability within the Project Environment

The Concrete Pier Cap with Wood Cladding alternative would offer similar structural durability as Alternative 2. However, the wood cladding aesthetic element would not endure in this environment, and may require replacement on a cycle of 10 years or less. Those portions of the cladding that are more exposed to decaying elements (tops, bottoms and ends) would have to be replaced more frequently than more sheltered pieces. The bottom ends of the cladding would be closer to the water surface and would be more susceptible to splashes and periodic submergence than the all-wood alternative because the concrete cap would envelope the top of the piles. Also, as previously noted, submergence of the west-most pier is statistically expected to occur during the life of this structure. In addition to the wetting and drying cycles, hydraulic pressures would tend to weaken the cladding even further.

Because repair and rehabilitation must be conducted on the water under the bridge, removal and replacement of cladding would be labor and equipment intensive. The inserts used to attach the wood cladding to the concrete also create an opportunity for water to penetrate the concrete cap to start the deterioration process.

Pros:

- ☑ Utilizes wood
- ☑ Structurally durable and long-lasting (minimum 75-year service life)
- ☑ Strong and stable

Cons:

- ☒ Wood cladding is highly susceptible to corrosion and decay
- ☒ Higher maintenance requirements
- ☒ Difficult and time consuming inspection
- ☒ Large number of visible bolts for the attachments that detract from aesthetics

4.0 CONCLUSION

Based on the issues described herein, Alternative 2 offers the best structural integrity/life span solution. Architectural finishes can be applied to enhance the appearance of the pier cap. Also Appendix III includes a concurring memorandum by HDR. For these reasons, MassDOT deems Alternative 2, Concrete Pier Cap as the most prudent and its recommended alternative.

p:\jobs-ged\masshighway\2009 sedrscm 5\assign #1 - chatham bridge\400 work products & reports - active & draft (no pdf)\410 draft reports\410.02 structural - bridge\new study dec 2012\chatham - pier cap feasability report draft mes .docx

Appendices

I. Bridge Renderings

II. Concrete Form Liner Examples

III. HDR Independent Commentary

Appendix I – Bridge Renderings

Bascule Pier Elevation

Bridge with Open Bascule Span

Mitchell River Bridge - Pedestrian View

Mitchell River Bridge Elevation

Stained Texturized Concrete Pier Cap

Appendix II - Concrete Form Liner Example

FITZGERALD FORMLINERS

Welcome! | Home | Catalog

Patterns may be available in other formliner types not shown below. Please ask your Fitzgerald Formliner Sales Representative for details.

Style: Wooden Plank (15 Results Found.) < 1 2

16936 Deep Heavy Random Grain Planks

From 8.75" to 13.375" wide, 0.75" deep

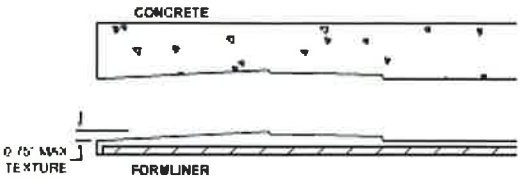

Download Pattern PDF

GrayLastic Elastomeric Urethane - Up to 100 uses. Mold-bonded to 0.75" plywood. Add 1.125" to liner thickness. Click here for cut-sheet

Part Size: 48" Wide x 96" Long

Max Depth: .75"
Grain: Heavy
Plank Width: From 8.75" to 13.375"
Slope: Uneven plane
Notes: No Interior Butt Joints

16938 Random Plank

1.5" wide, 0.75" max depth

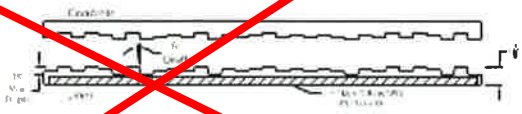

Download Pattern PDF

GrayLastic Elastomeric Urethane - Up to 100 uses. Mold-bonded to 0.75" plywood. Add 1.125" to liner thickness. Click here for cut-sheet

Part Size: 48" W x 96" L 48" W x 240" L

Max Depth: .75
Peak: 1.5
Valley: 1.5

FITZGERALD
FORMLINERS
16936

Appendix III. HDR Independent Commentary

Independent Review of Mitchell River Bridge, "Pier Cap Alternatives Evaluation dated December 21, 2012"

Prepared by: HDR Incorporated

Date: January 10th, 2013

Review

HDR performed a review of URS' report titled "Pier Cap Alternatives Evaluation dated December 21, 2012." The analysis investigates three alternative pier cap options:

- Alternative 1: all wood pier cap
- Alternative 2: all concrete pier cap
- Alternative 3: concrete cap with wood cladding

The URS report provides information which recommends Alternative 2 by considering structural suitability, constructability/detailing, inspection and maintenance, durability, and context sensitivity/aesthetics. HDR is in agreement with the recommendation of Alternative 2.

Overview

The pier cap is a critical structural member. It is a transverse element constructed at the top of the driven piles and supports the longitudinal Glulam beams above. The pier cap needs to be a robust member capable of spanning between the piles and transferring the load from the superstructure to the substructure. The stiffness of the pier cap is needed to control differential deflections and to provide rigidity to the pile group below. The proposed timber wearing surface will allow for water infiltration and offers little protection of the supporting pier cap below. Water will collect and get trapped in this location as we frequently see in bridge inspections. Therefore, it is important to protect, prevent, and/or detail this connection to minimize future deterioration.

Alternative 1

HDR has reviewed Figure 1, All Timber Pier Cap, and finds the detail to be problematic. The use of multiple Glulams stitched together by mechanical means is reasonable and expected for such a large timber member. It is important to note that Glulams are commonly used although they are a composite wood product.

HDR would like to document a couple of major concerns with Alternative 1:

- The complexity and number of the exposed connections
    - The number of exposed connections and penetration of bolts into the Glulams should be minimized to prevent future deterioration at this susceptible location
- The inability to get proper air circulation to dry out the area
    - Water will seep in and become trapped between the three stitched Glulams making this detail considerably less durable
    - Moisture control is imperative for timber to prevent decay in timber bridges as excessive moisture content supports fungal growth and insect exposure
    - Moisture will be trapped between the steel plates and the Glulams

- Replacing the cap would require completely dismantling the bridge which is costly
- Constructability
    - The connection between the piles and pier cap is extremely difficult to field fabricate. We understand that a welded collar will be used at the top of the pile. We assume that a fillet weld will be used at the base of the collar to attach to the pile. This detailing raises concern. It is not recommended that the fillet weld be relied on to carry all the vertical load. This is not a preferred detail and may be susceptible to fatigue. A bearing/milled connection would be best although also very difficult to achieve in the field. The pipe piles would need to be precisely cut at the same elevation and surface milled (allowing virtually no construction tolerance) to ensure a proper bearing connection between the pile and bearing plate.
    - Pipe pile to connection plate is an overhead field weld that is strongly discouraged by MassDOT standard practice

HDR does not recommend the use of an all timber cap.

Alternative 2

HDR has reviewed Figure 2, Concrete Pier Cap, and finds the detail to be preferred. The all concrete pier cap option provides a cost effective alternative.

Key benefits include:

- Pile connections will be embedded and protected in the concrete cap
    - This eliminates exposed connections and provides protection from water infiltration
- The concrete cap is a more standard construction technique and can accommodate irregularity of pile placement
    - The driven pile locations will not be exactly as shown on the contract drawings
    - The formwork can easily be adjusted to accommodate driven pile locations
- The concrete cap provides a cleaner, more streamlined appearance
    - There are no exposed connections
    - There is one uniform member
- Concrete additives can be used to increase corrosion resistance of the concrete cap
- Form liners such as rough cut lumber and concrete stain can be specified to make the structure emulate a wooden pile cap

HDR recommends this alternative.

Alternative 3

HDR has reviewed Figure 3, Concrete Pier Cap with Timber Cladding, and finds the details to be reasonable but will likely have longer term inspection and maintenance issues. This alternative is presented as an alternative to achieve both the structural benefits of a concrete pier cap and aesthetics using wood cladding.

HDR would like to document a couple of major concerns with Alternative 3:

- A significant number of connections would be needed to attach the cladding to the concrete pier cap and this lends itself to future deterioration
    - Our bridge inspectors find that cladding fails frequently if not properly maintained
    - Since the pier cap is not easily accessible, it is likely that it will not be properly maintained
    - The cladding is costly and future bridge inspections will require that the cladding be removed to provide access to the structural member beneath. According to the figure, that would mean removing approximately one hundred bolts and multiple panels to complete inspection at each pier. This would require a contractor, barge, and miscellaneous equipment at significant added expense every two years.

HDR does not recommend the use of concrete pier cap with timber cladding.

Summary

Alternative 2 is a functional and cost effective alternative. Aesthetics can be addressed as URS states in their report by using forms liners and stains to assist with blending the cap. HDR suggests having the Contractor prepare samples of the concrete finishes in the future and allow stakeholders to have a voice in the selection of the finish.